Ersatzteilliste
Spare parts list
Liste des pièces de rechange

Lista parti di ricambio
Onderdelenlijst
Lista de repuestos

4655274
(2010/08) Ri

Speicher
ST151 - 951

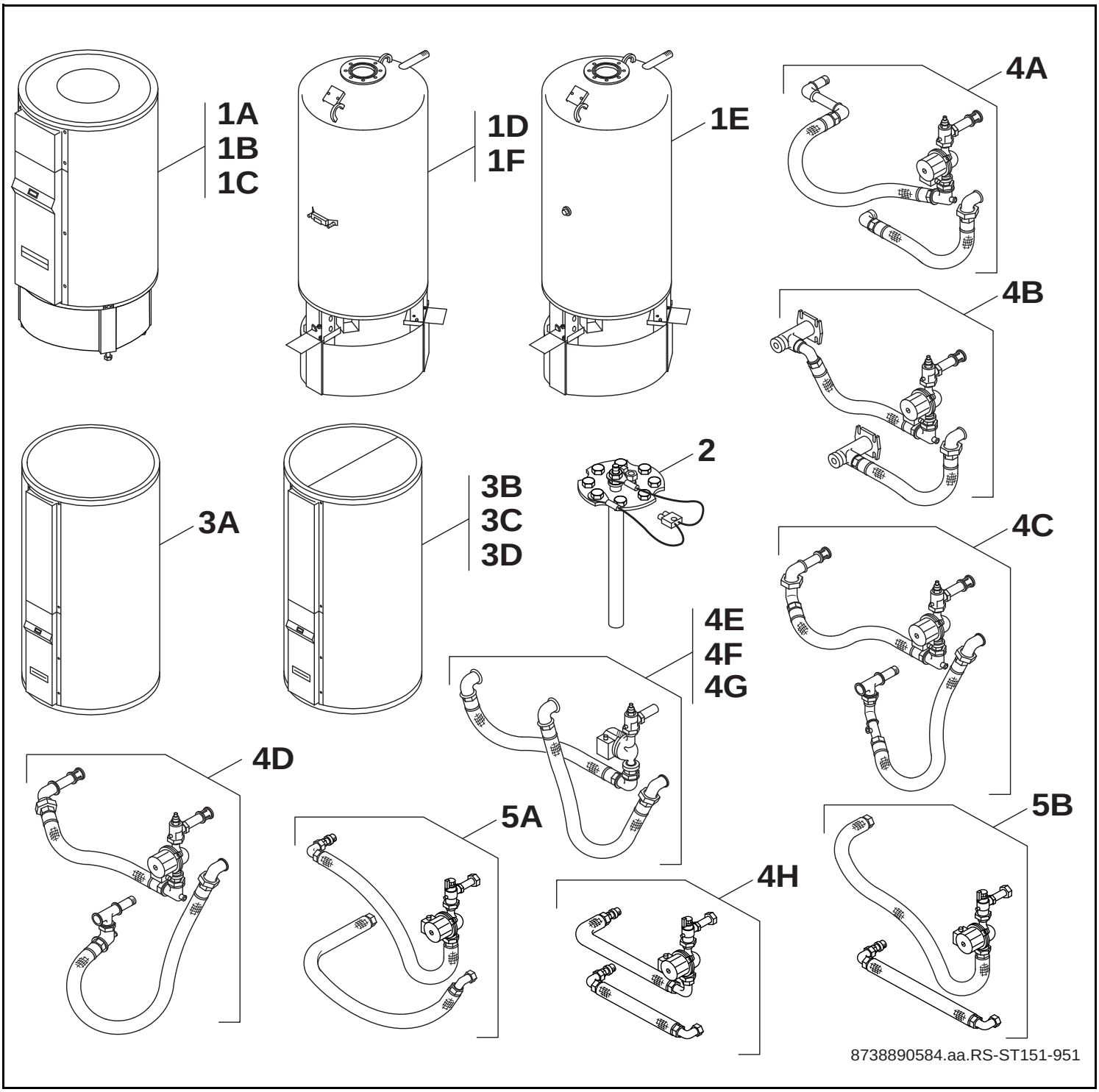

Buderus

Deutsch

Wichtige Hinweise

- Ersatzteile dürfen nur von einem zugelassenen Installateur eingebaut werden!
- Im Anhang finden Sie:
  - die Übersetzungen aller verwendeten Teilebezeichnungen
  - eine Übersicht der Gerätetypen und Länder, für die diese Ersatzteilliste gilt.

English

Important notes

- The spare parts may only be installed by an approved installer!
- In the appendix you will find:
  - a list of translations of the names of all parts used
  - a list of the models and countries to which this spare parts list applies.

Français

Indications importantes

- L'installation des pièces de rechange doit être effectuée par un professionnel qualifié!
- Veuillez trouver en annexe:
  - les traductions de toutes les désignations des pièces utilisées
  - une vue globale des types de chaudières et des pays pour lesquels la présente liste des pièces de rechange est valable.

Português

Informações importantes

- Peças de substituição só podem ser montadas por um técnico credenciado!
- Em anexo encontra:
  - as traduções das designações de todas as peças utilizadas.
  - lista dos aparelhos e países para os quais esta lista de peças de substituição é válida.

Italiano

Avvertenze importanti

- Le parti di ricambio possono essere montate esclusivamente da personale qualificato ed in possesso dei requisiti tecnico-professionali!
- In appendice sono reperibili:
  - traduzione di ogni descrizione relativa alle varie parti di ricambio
  - elenco di sigle e codici, corrispondente ai vari paesi di destinazione.

Español

Indicaciones importantes

- Los repuestos solamente deben ser montados por los servicios técnicos oficiales de la marca!
- En el anexo podrá encontrar:
  - la traducción de todas las denominaciones de piezas empleadas
  - una relación de los tipos de aparato y países en los que se aplica esta lista de repuestos.

Nederlands

Belangrijke aanwijzing

- Onderdelen mogen alleen door een erkend installateur worden vervangen!
- In de bijlage vindt u:
  - de vertalingen van de gebruikte onderdelentekeningen
  - een overzicht van toesteltypen en de landen waarvoor deze onderdelenlijst bedoeld is.

Türkçe

Önemli Bilgiler

- Yedek parçalar sadece yetkili tesisatçılar tarafından monte edilebilir!
- Aşağıdaki bilgileri ekli olarak bulabilirsiniz:
  - Tüm kullanılan parça tanımlarının tercümeleri
  - Bu yedek parça listesinin geçerli olduğu tüm cihaz çeşitleri ve ülkelerin özeti.

Ersatzteilliste Spare parts list	Liste des pièces de rechange Lista parti di ricambio	Onderdelenlijst Lista de repuestos

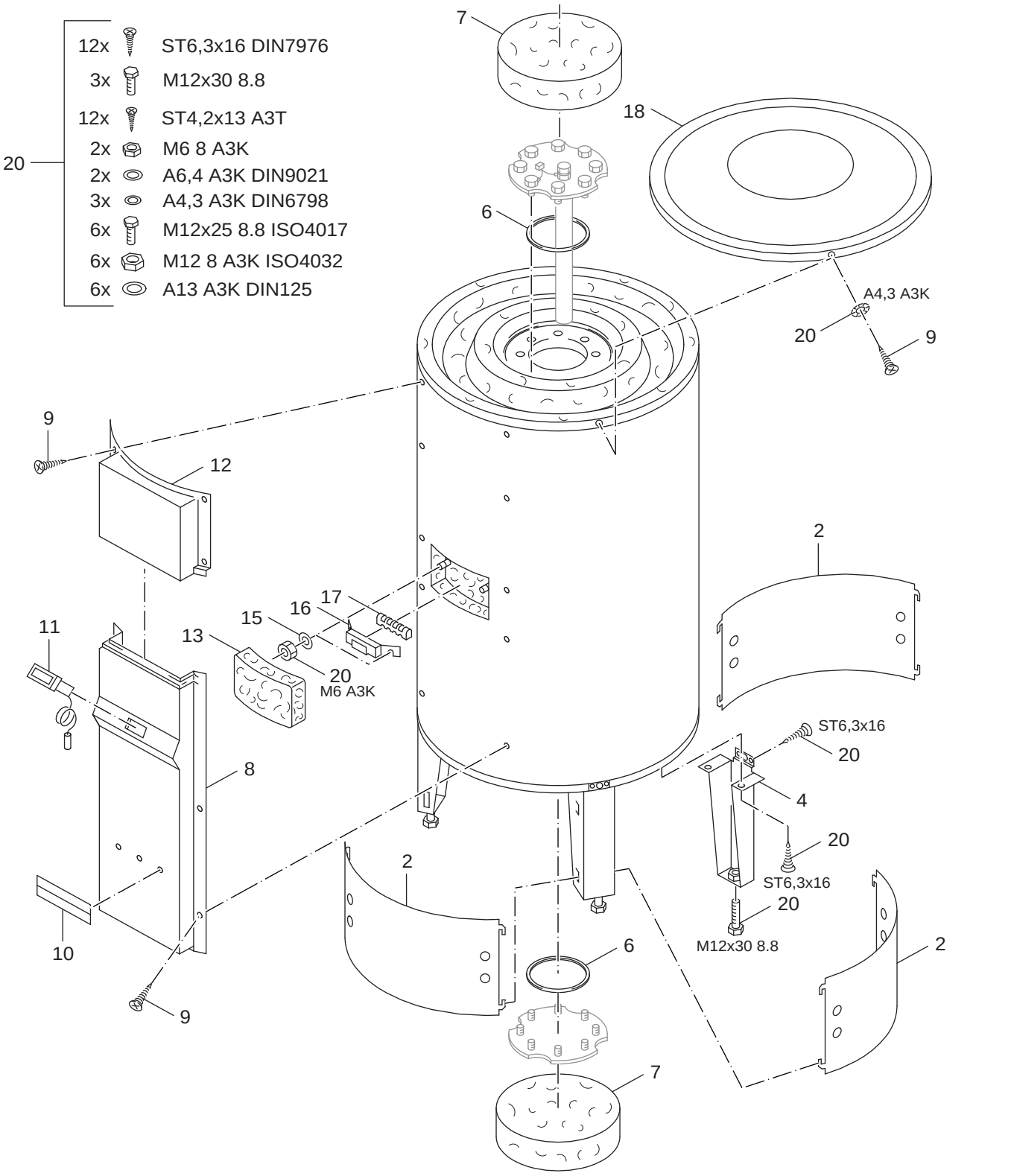

8738890585.aa.RS-Speicher ST151-301

1 **A**	Speicher ST151-301 Cylinder ST151-301 Ballon ST151-301 Bollitore ST151-301 Boiler ST151-301 Acumulador ST151-301	**Speicher** **ST151 - 951**

Pos	Bezeichnung description dénomination descrizioni benaming descripción	Bestell-Nr. Ordering no. Numero de commande n° d'ordine Bestelnummer Número el ordenar	ST151 - 951																Bemerkungen Remarks Remarques Osservazioni Opmerkingen Observaciones
2	Sockelblende ST 151-301	5236120	■																
4	Verkldg Fuß ST,SE,SF,ST-D/F 151-301	5222144	■																
6	O-Ring 132x10mm für Handloch	7 747 007 985	■																
7	Wärmeschutz D260 Reinigungsöffnung 2	8 718 572 451 0	■																
8	Kabelkanal schwarz Narbung "SE" unten	5222832	■																
9	Blechschraube C St4,2x13 A3T (10x)	7 747 027 696	■																
10	Geräteschild (TBS-ISOCAL)	5222980	■																
11	Thermometer kpl 30-80 Grad C°	5236200	■																
12	Kabelkanal ST 151 oben	5222834	■																
12	Kabelkanal ST 201 oben	5222836	■																
12	Kabelkanal ST 301 oben	5222838	■																
13	Wärmeschutzteil Anlegefühler	5222856	■																
15	Scheibe DIN9021 A6,4 A3K	5264166	■																
16	Halter für Anlegefühler	5222150	■																
17	Federspannleiste für Halter	5222152	■																
18	Verkldg Deckel SU/ST/SM 300	7 747 027 926	■																
20	Befestigungsteile Satz ST151-951	5665790	■																

Speicher
ST151 - 951

Speicher ST151-301
Cylinder ST151-301
Ballon ST151-301
Bollitore ST151-301
Boiler ST151-301
Acumulador ST151-301

1A

Ersatzteilliste Spare parts list	Liste des pièces de rechange Lista parti di ricambio	Onderdelenlijst Lista de repuestos

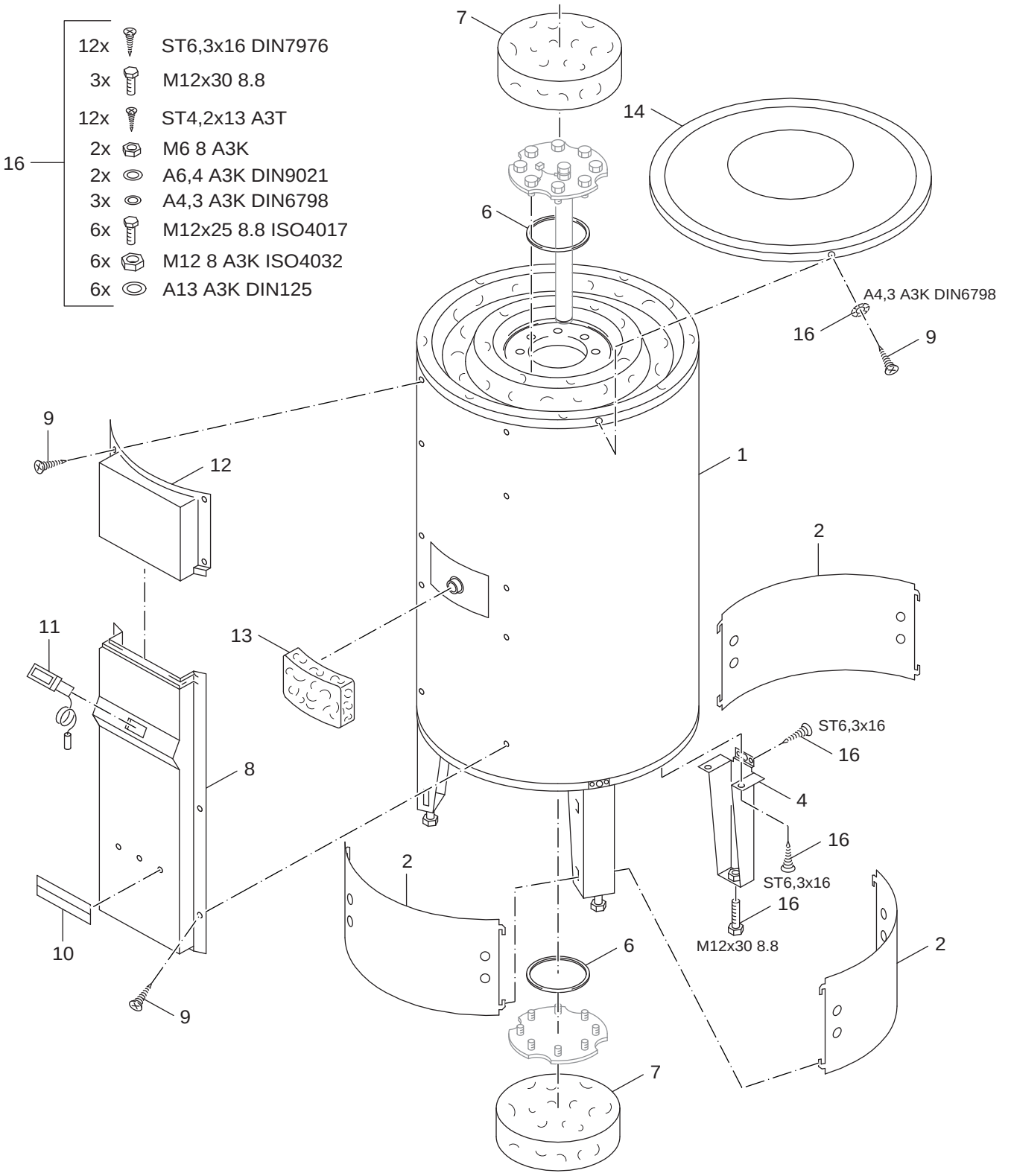

8738890586.aa.RS-Speicher ST/DF151-301

1 **B**	Speicher ST/DF151-301 Cylinder ST/DF151-301 Ballon ST/DF151-301 Bollitore ST/DF151-301 Boiler ST/DF151-301 Acumulador ST/DF151-301	**Speicher** **ST151 - 951**

Pos	Bezeichnung description dénomination descrizioni benaming descripción	Bestell-Nr. Ordering no. Numero de commande n° d'ordine Bestelnummer Número el ordenar	ST151 - 951																Bemerkungen Remarks Remarques Osservazioni Opmerkingen Observaciones
1	Speicher ST301 D/F	5235180	■																
2	Sockelblende ST 151-301	5236120	■																
4	Verkldg Fuß ST,SE,SF,ST-D/F 151-301	5222144	■																
6	O-Ring 132x10mm für Handloch	7 747 007 985	■																
7	Wärmeschutz D260 Reinigungsöffnung 2	8 718 572 451 0	■																
8	Kabelkanal schwarz Narbung "SE" unten	5222832	■																
9	Blechschraube C St4,2x13 A3T (10x)	7 747 027 696	■																
10	Geräteschild (TBS-ISOCAL)	5222980	■																
11	Thermometer kpl 30-80 Grad C°	5236200	■																
12	Kabelkanal ST 151 oben	5222834	■																
12	Kabelkanal ST 201 oben	5222836	■																
12	Kabelkanal ST 301 oben	5222838	■																
13	Wärmeschutzteil Anlegefühler	5222856	■																
14	Verkldg Deckel SU/ST/SM 300	7 747 027 926	■																
16	Befestigungsteile Satz ST151-951	5665790	■																

Speicher
ST151 - 951

Speicher ST/DF151-301
Cylinder ST/DF151-301
Ballon ST/DF151-301
Bollitore ST/DF151-301
Boiler ST/DF151-301
Acumulador ST/DF151-301

1B

Ersatzteilliste
Spare parts list

Liste des pièces de rechange
Lista parti di ricambio

Onderdelenlijst
Lista de repuestos

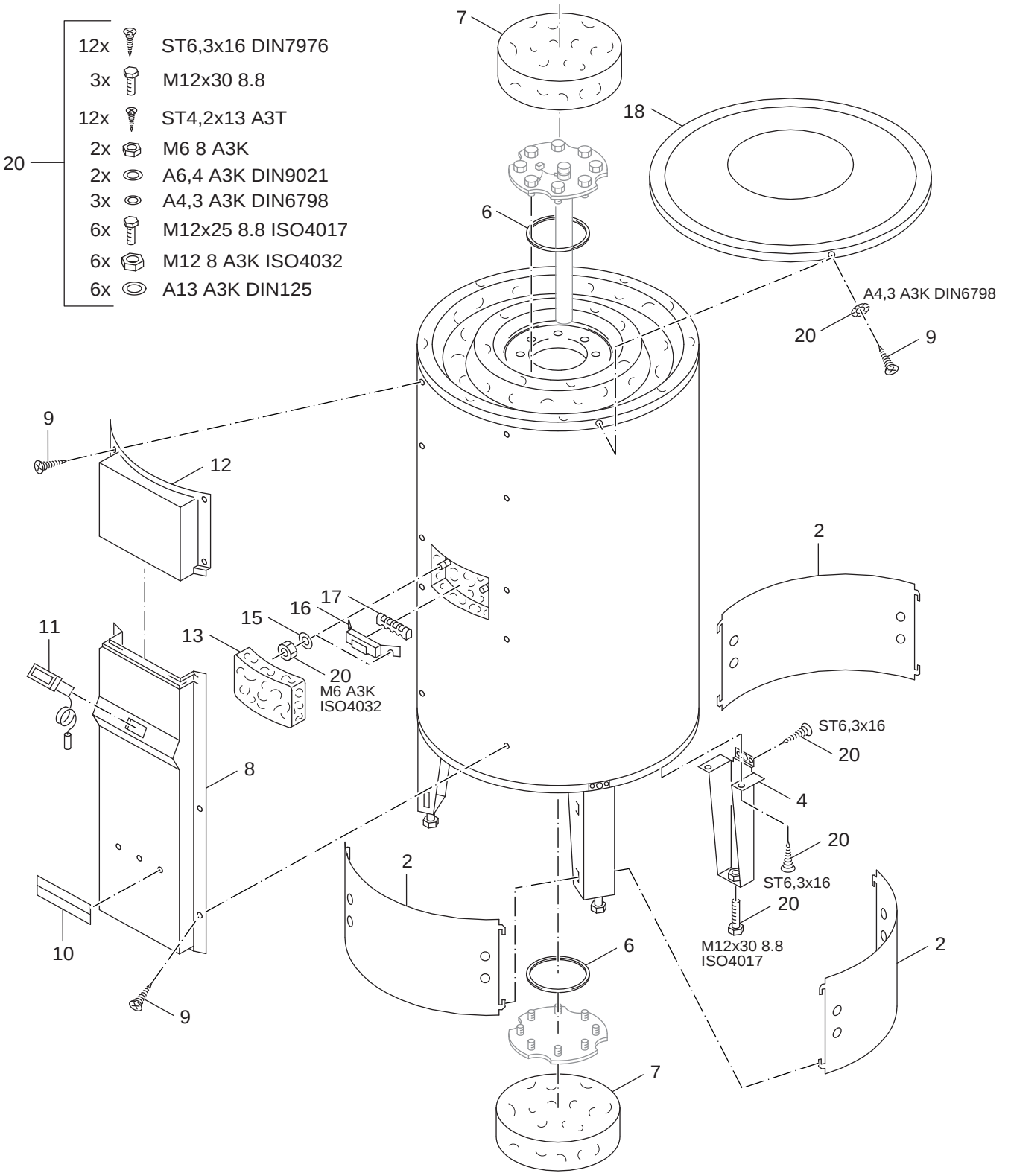

8738890587.aa.RS-Speicher ST/SF/SE201-301

1 **C**	Speicher ST/SF/SE201-301 Cylinder ST/SF/SE201-301 Ballon ST/SF/SE201-301 Bollitore ST/SF/SE201-301 Boiler ST/SF/SE201-301 Acumulador ST/SF/SE201-301	**Speicher** **ST151 - 951**

Pos	Bezeichnung description dénomination descrizioni benaming descripción	Bestell-Nr. Ordering no. Numero de commande n° d'ordine Bestelnummer Número el ordenar	ST151 - 951																Bemerkungen Remarks Remarques Osservazioni Opmerkingen Observaciones
2	Sockelblende ST 151-301	5236120	■																
4	Verkldg Fuß ST,SE,SF,ST-D/F 151-301	5222144	■																
6	O-Ring 132x10mm für Handloch	7 747 007 985	■																
7	Wärmeschutz D260 Reinigungsöffnung 2	8 718 572 451 0	■																
8	Kabelkanal schwarz Narbung "SE" unten	5222832	■																
9	Blechschraube C St4,2x13 A3T (10x)	7 747 027 696	■																
10	Geräteschild (TBS-ISOCAL)	5222980	■																
11	Thermometer kpl 30-80 Grad C°	5236200	■																
12	Kabelkanal ST 201 oben	5222836	■																
12	Kabelkanal ST 301 oben	5222838	■																
13	Wärmeschutzteil Anlegefühler	5222856	■																
15	Scheibe DIN9021 A6,4 A3K	5264166	■																
16	Halter für Anlegefühler	5222150	■																
17	Federspannleiste für Halter	5222152	■																
18	Verkldg Deckel SU/ST/SM 300	7 747 027 926	■																
20	Befestigungsteile Satz ST151-951	5665790	■																

Speicher
ST151 - 951

Speicher ST/SF/SE201-301
Cylinder ST/SF/SE201-301
Ballon ST/SF/SE201-301
Bollitore ST/SF/SE201-301
Boiler ST/SF/SE201-301
Acumulador ST/SF/SE201-301

1C

Ersatzteilliste Spare parts list	Liste des pièces de rechange Lista parti di ricambio	Onderdelenlijst Lista de repuestos

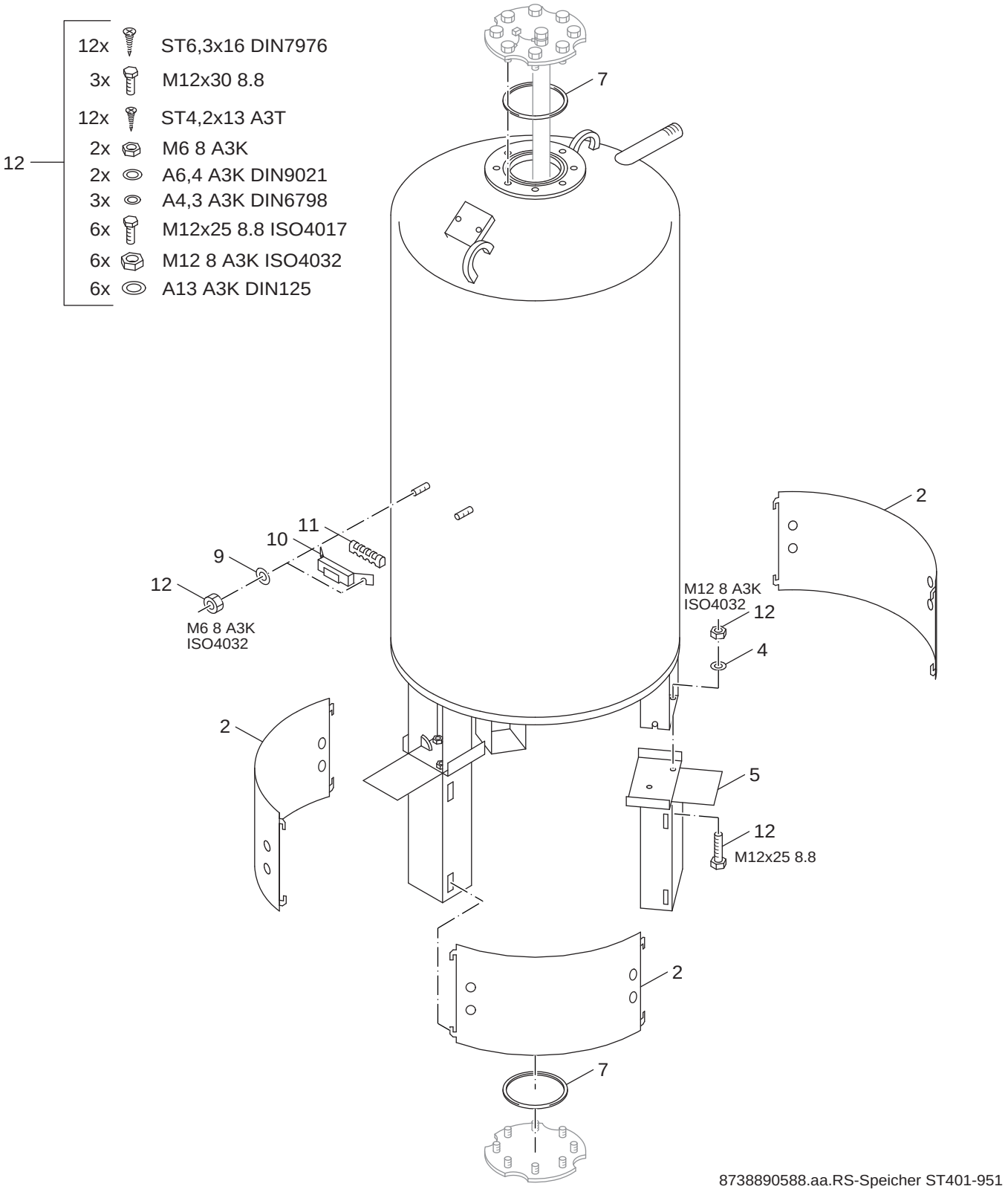

1 **D**	Speicher ST401-951 Cylinder ST401-951 Ballon ST401-951 Bollitore ST401-951 Boiler ST401-951 Acumulador ST401-951	**Speicher** **ST151 - 951**

Pos	Bezeichnung description dénomination descrizioni benaming descripción	Bestell-Nr. Ordering no. Numero de commande n° d'ordine Bestelnummer Número el ordenar	ST151 - 951																Bemerkungen Remarks Remarques Osservazioni Opmerkingen Observaciones
2	Sockelblende ST 401	5236124	■																
2	Sockelblende ST 551-751	5236126	■																
2	Sockelblende ST 951	5236130	■																
4	Scheibe DIN125-A13-A3K	5883276	■																
5	Aufstellfüße ST 401/551/751/951 (3x)	5236420	■																
7	O-Ring 132x10mm für Handloch	7 747 007 985	■																
9	Scheibe DIN9021 A6,4 A3K	5264166	■																
10	Halter für Anlegefühler	5222150	■																
11	Federspannleiste für Halter	5222152	■																
12	Befestigungsteile Satz ST151-951	5665790	■																

Speicher
ST151 - 951

Speicher ST401-951
Cylinder ST401-951
Ballon ST401-951
Bollitore ST401-951
Boiler ST401-951
Acumulador ST401-951

1D

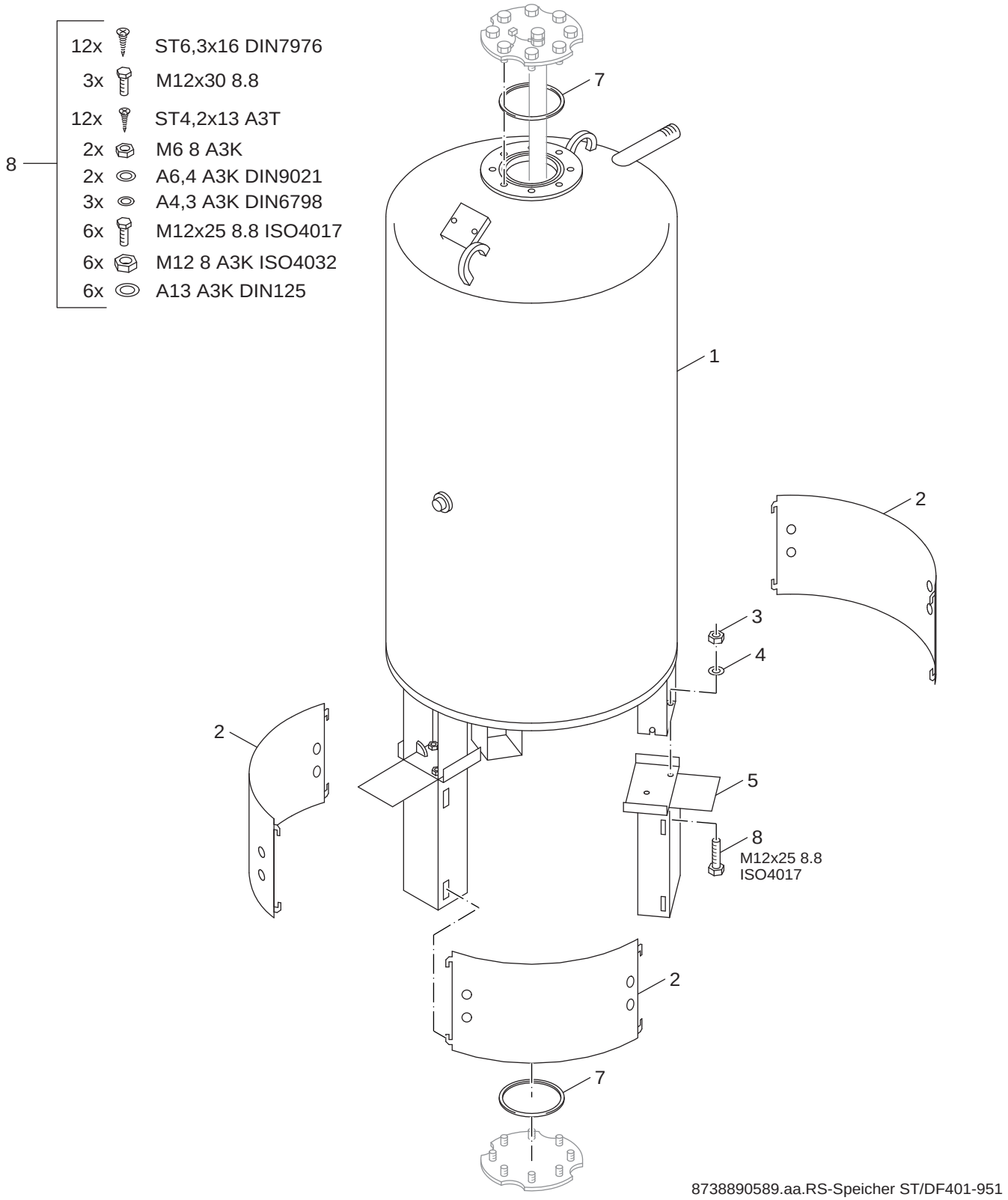

1 **E**	Speicher ST/DF401-951 Cylinder ST/DF401-951 Ballon ST/DF401-951 Bollitore ST/DF401-951 Boiler ST/DF401-951 Acumulador ST/DF401-951	**Speicher** **ST151 - 951**

Pos	Bezeichnung description dénomination descrizioni benaming descripción	Bestell-Nr. Ordering no. Numero de commande n° d'ordine Bestelnummer Número el ordenar	ST151 - 951																Bemerkungen Remarks Remarques Osservazioni Opmerkingen Observaciones
1	Speicher ST401 D/F	5237330	■																
1	Speicher ST551 D/F	5237340	■																
1	Speicher ST751 D/F	5237350	■																
1	Speicher ST951 D/F	5237360	■																
2	Sockelblende ST 401	5236124	■																
2	Sockelblende ST 551-751	5236126	■																
2	Sockelblende ST 951	5236130	■																
3	6kt-Mutter ISO4032 M12 8 A3K	5090068	■																
4	Scheibe DIN125-A13-A3K	5883276	■																
5	Aufstellfüße ST 401/551/751/951 (3x)	5236420	■																
7	O-Ring 132x10mm für Handloch	7 747 007 985	■																
8	Befestigungsteile Satz ST151-951	5665790	■																

Speicher
ST151 - 951

Speicher ST/DF401-951
Cylinder ST/DF401-951
Ballon ST/DF401-951
Bollitore ST/DF401-951
Boiler ST/DF401-951
Acumulador ST/DF401-951

1E

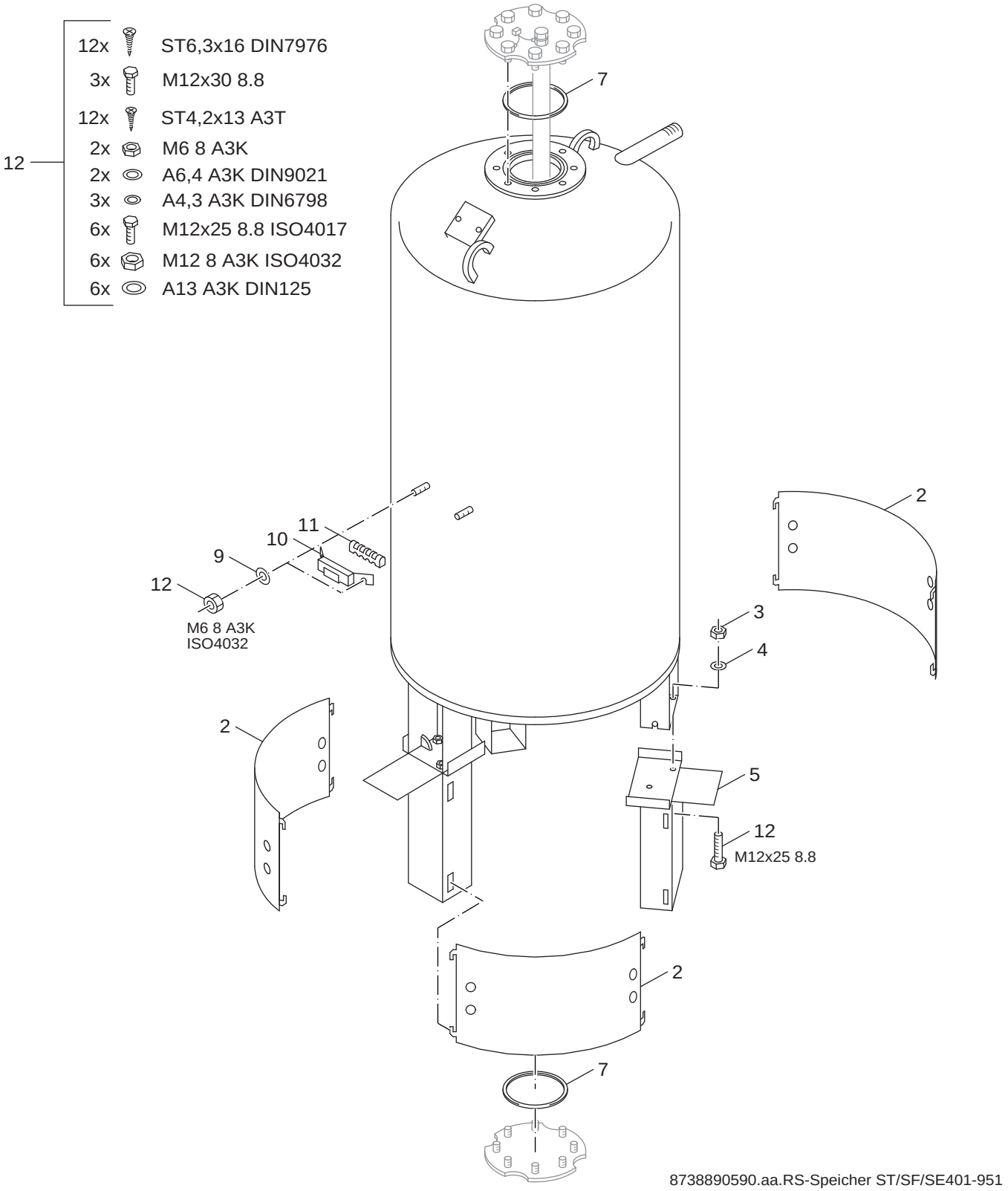

1 **F**	Speicher ST/SF/SE401-951 Cylinder ST/SF/SE401-951 Ballon ST/SF/SE401-951 Bollitore ST/SF/SE401-951 Boiler ST/SF/SE401-951 Acumulador ST/SF/SE401-951	**Speicher** **ST151 - 951**

Pos	Bezeichnung description dénomination descrizioni benaming descripción	Bestell-Nr. Ordering no. Numero de commande n° d'ordine Bestelnummer Número el ordenar	ST151 - 951																Bemerkungen Remarks Remarques Osservazioni Opmerkingen Observaciones
2	Sockelblende ST 401	5236124	■																
2	Sockelblende ST 551-751	5236126	■																
2	Sockelblende ST 951	5236130	■																
3	6kt-Mutter ISO4032 M12 8 A3K	5090068	■																
4	Scheibe DIN125-A13-A3K	5883276	■																
5	Aufstellfüße ST 401/551/751/951 (3x)	5236420	■																
7	O-Ring 132x10mm für Handloch	7 747 007 985	■																
9	Scheibe DIN9021 A6,4 A3K	5264166	■																
10	Halter für Anlegefühler	5222150	■																
11	Federspannleiste für Halter	5222152	■																
12	Befestigungsteile Satz ST151-951	5665790	■																

Speicher
ST151 - 951

Speicher ST/SF/SE401-951
Cylinder ST/SF/SE401-951
Ballon ST/SF/SE401-951
Bollitore ST/SF/SE401-951
Boiler ST/SF/SE401-951
Acumulador ST/SF/SE401-951

1F

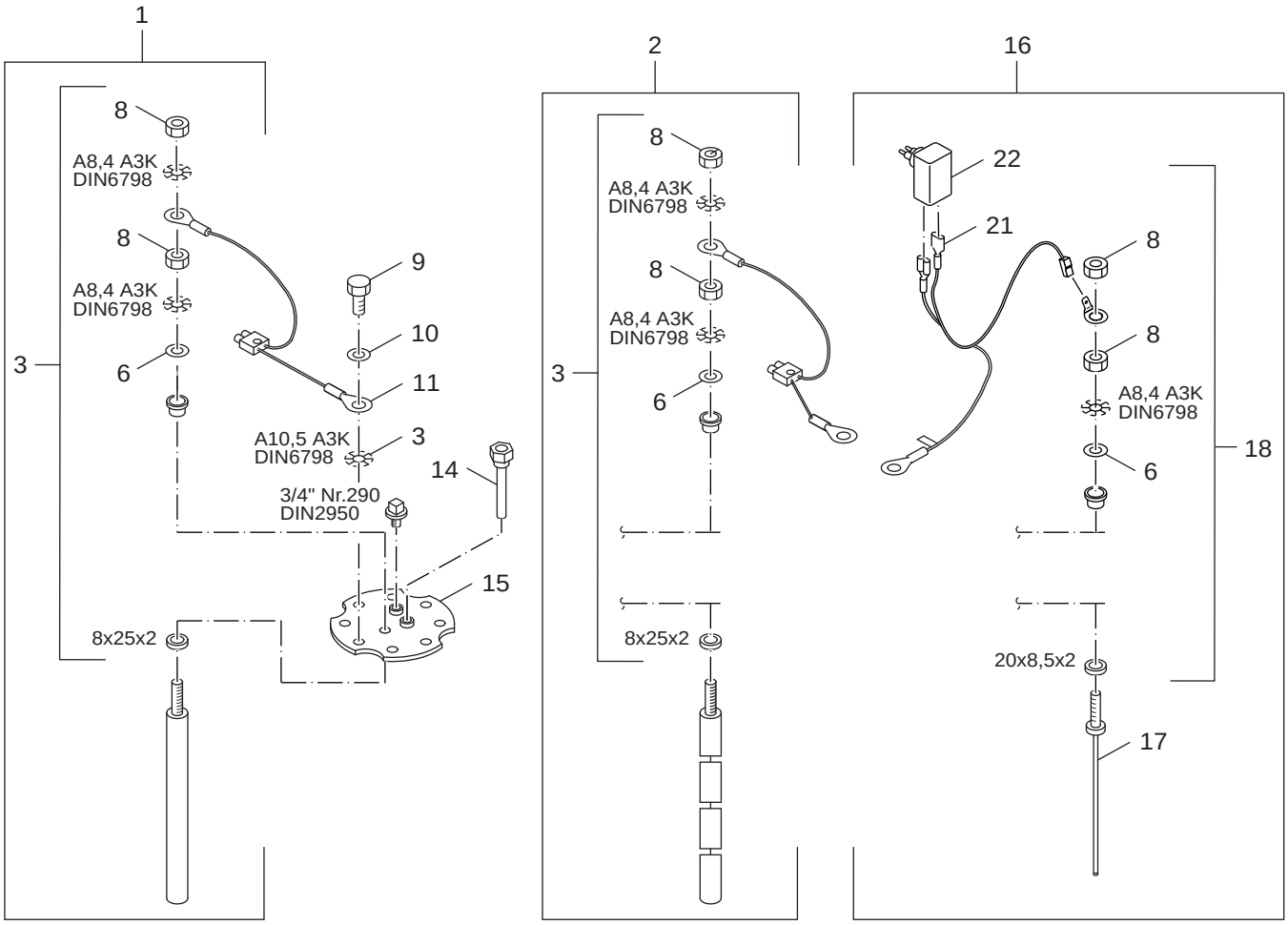

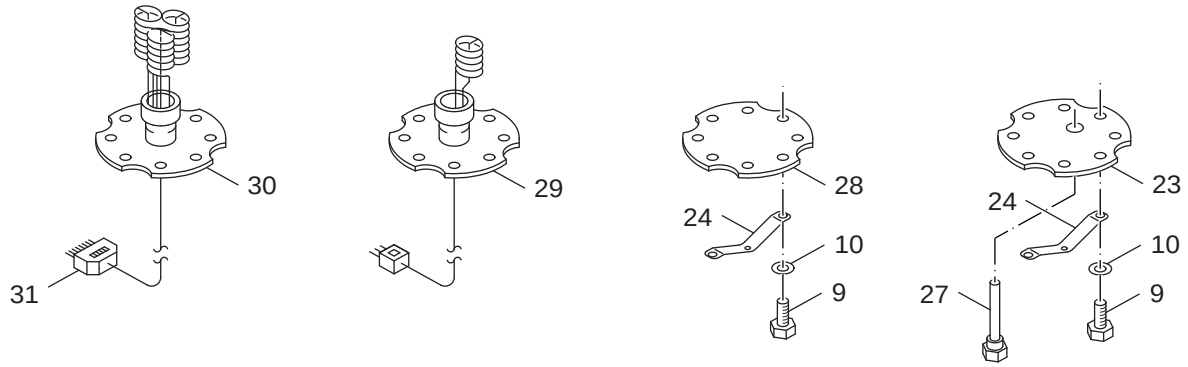

	Anoden-Einbaulängen			
bei Speicher	401	551	751	951
ST	800mm	900mm	1250mm	1350mm
ST-DF	800mm	900mm	1250mm	1350mm
ST-SF	550mm	700mm	900mm	1000mm
ST-SE	550mm			

8738890591.aa.RS-Anoden und E-Heizung ST151-951

2

Anode und Elektroheizung ST151-951
Anode and electric heater ST151-951
Anode + Chauffage électrique ST151-951
Anodo + Resistenza elettrica ST151-951
Anode + Elektroverwarming ST151-951
Anodo + Calefacción eléctrica ST151-951

Speicher
ST151 - 951

Pos	Bezeichnung description dénomination descrizioni benaming descripción	Bestell-Nr. Ordering no. Numero de commande n° d'ordine Bestelnummer Número el ordenar	ST151 - 951																Bemerkungen Remarks Remarques Osservazioni Opmerkingen Observaciones
1	Anode D33x400mm	8 718 571 568 0	■																
1	Anode D33x500mm	8 718 571 569 0	■																
1	Anode D33x700mm	8 718 571 570 0	■																
1	Anode D33x900mm	8 718 571 572 0	■																
1	Anode D33x1400mm	8 718 571 573 0	■																
2	Kettenanode 3Gld	63020947	■																
2	Kettenanode 4Gld	63020949	■																
2	Kettenanode 8Gld	63020953	■																
3	Anodenbefestigungs-Set 10 Pack Einschr	5264278	■																
6	Unterlegscheibe DIN125 A8,4 A3K (10x)	8 718 571 269 0	■																
8	6kt-Mutter ISO4032 M8 8 A3K	82585180	■																
9	Schraube ISO4017 M10x30 A3K (10x)	7 747 022 050	■																
10	Scheibe DIN125 A10,5 A3K	82867140	■																
11	Überwachung Mg-Anode	7079410	■																
14	Tauchhülse R3/4"x100	5446065	■																
15	Handlochdeckel D210 10,8 thermogl	63014368	■																Blinddeckel
15	Handlochdeckel D210mm	8 718 570 896 0	■																
16	Fremdstromanode Correx UP Nr 10-19H/3	3868354	■																
17	Inert-Anode 400mm lg mit Gewindestift M8	3868346	■																
18	Anodenbefestigungs-Set für Inert-An (5x)	3868384	■																
21	Anschlussleitung 3500mm mit Ösen und Stecker	3868380	■																
22	Steckerpotentiostat UP 19H	8 718 570 981 0	■																
23	Handlochdeckel thermoglasiert Muffe 3/4"	7 747 029 311	■																
24	Transportbügel für ST150-300	5222896	■																
27	Tauchhülse R3/4"x190 Oberfl beschichtet	5446180	■																
28	Handlochdeckel D210 (5mm) thermogl	63014367	■																
29	Elektro-Zusatzheizung 2KW (1x2kW)	67903017	■																
30	Elektro-Zusatzheizung 6KW (3x2kW)	67903018	■																
30	Elektro-Zusatzheizung 9KW (3x3kW)	67903019	■																
30	Elektro-Zusatzheizung 6KW (1x3, 2x1,5kW)	67903048	■																
31	Steckerteil ST18/7 versilbert	67903164	■																

Speicher
ST151 - 951

Anode und Elektroheizung ST151-951
Anode and electric heater ST151-951
Anode + Chauffage électrique ST151-951
Anodo + Resistenza elettrica ST151-951
Anode + Elektroverwarming ST151-951
Anodo + Calefacción eléctrica ST151-951

2

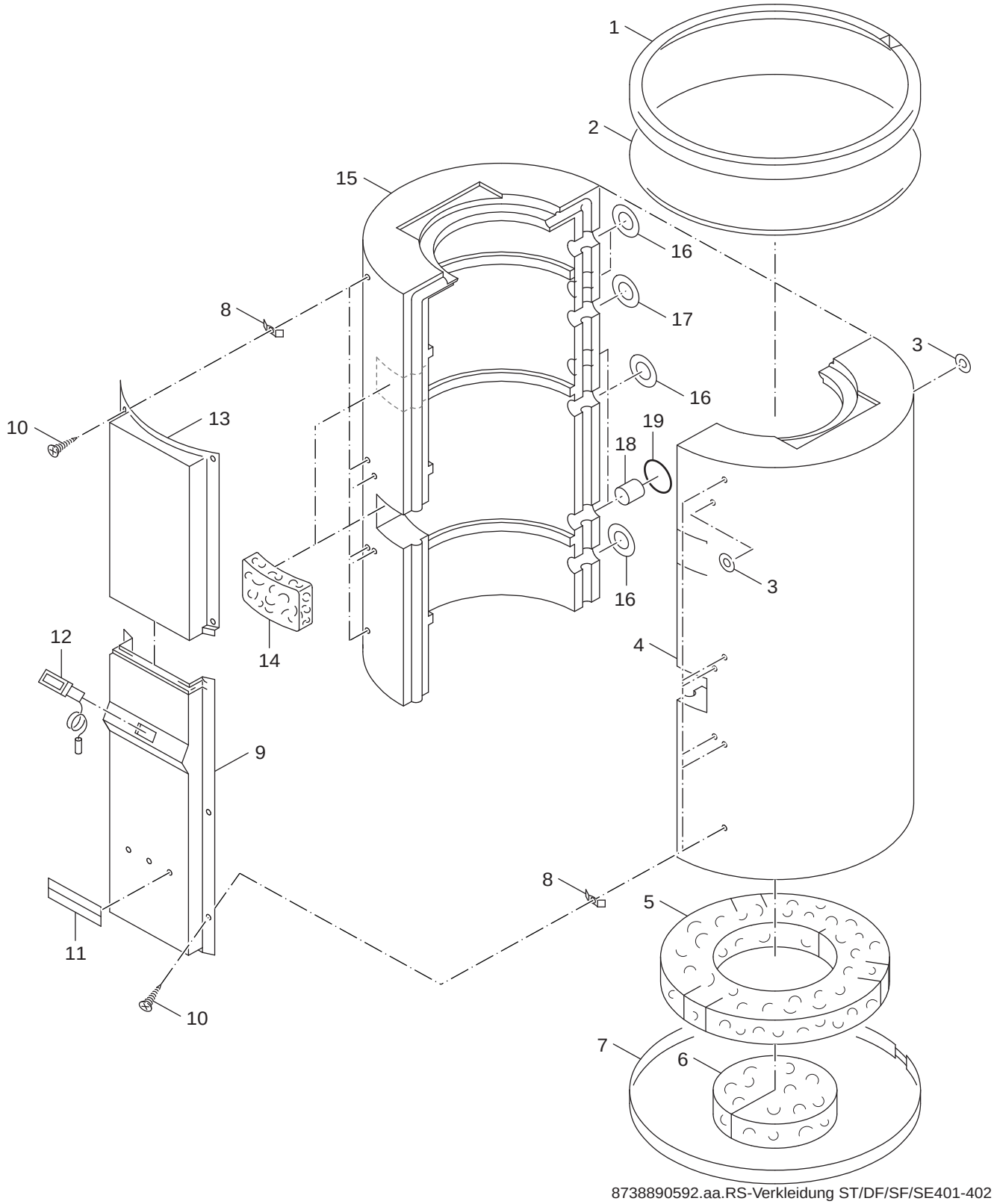

8738890592.aa.RS-Verkleidung ST/DF/SF/SE401-402

3 **A** Verkleidung ST/DF/SF/SE401-402 Casing ST/DF/SF/SE401-402 Carénage ST/DF/SF/SE401-402 Rivestimento ST/DF/SF/SE401-402 Bekleding ST/DF/SF/SE401-402 Revestimiento ST/DF/SF/SE401-402	**Speicher** **ST151 - 951**

Pos	Bezeichnung description dénomination descrizioni benaming descripción	Bestell-Nr. Ordering no. Numero de commande n° d'ordine Bestelnummer Número el ordenar	ST151 - 951																Bemerkungen Remarks Remarques Osservazioni Opmerkingen Observaciones
1	Spannband oben - ST 401 D810	5222702	■																
2	Abdeckung ST401 NZ	5222660	■																
3	Rosette R 1/8" x D60mm ST401-951L	5222730	■																
4	Wärmeschutz Segment rechts ST 401	5222716	■																
5	Scheibe 680x80mm	5222684	■																
6	Scheibe 350x80mm, ST 551/751/951 L	5222682	■																
7	Spannband U - ST 401 D810mm	5222700	■																
8	Haltefeder Schaltfeld	5118140	■																
9	Kabelkanal schwarz Narbung "SE" unten	5222832	■																
10	Blechschraube C St4,2x13 A3T (10x)	7 747 027 696	■																
11	Geräteschild (TBS-ISOCAL)	5222980	■																
12	Thermometer kpl 30-80 Grad C°	5236200	■																
13	Kabelkanal ST 401 oben	5222843	■																
14	Wärmeschutzteil Anlegefühler	5222856	■																
15	Wärmeschutz Segment links ST 401	5222718	■																
16	Rosette R 1 1/4" x D120mm ST401-751L	5222736	■																
17	Rosette R 3/4" x D120mm ST401-951L	5222734	■																
18	Füllstück D70x70mm ST401-951	5222985	■																
19	Rosette D120mm	5222737	■																
	Reparaturset 148x210mm	5222090	■																
	Reparaturset 210x297mm	5222092	■																

Speicher
ST151 - 951

Verkleidung ST/DF/SF/SE401-402
Casing ST/DF/SF/SE401-402
Carénage ST/DF/SF/SE401-402
Rivestimento ST/DF/SF/SE401-402
Bekleding ST/DF/SF/SE401-402
Revestimiento ST/DF/SF/SE401-402

3A

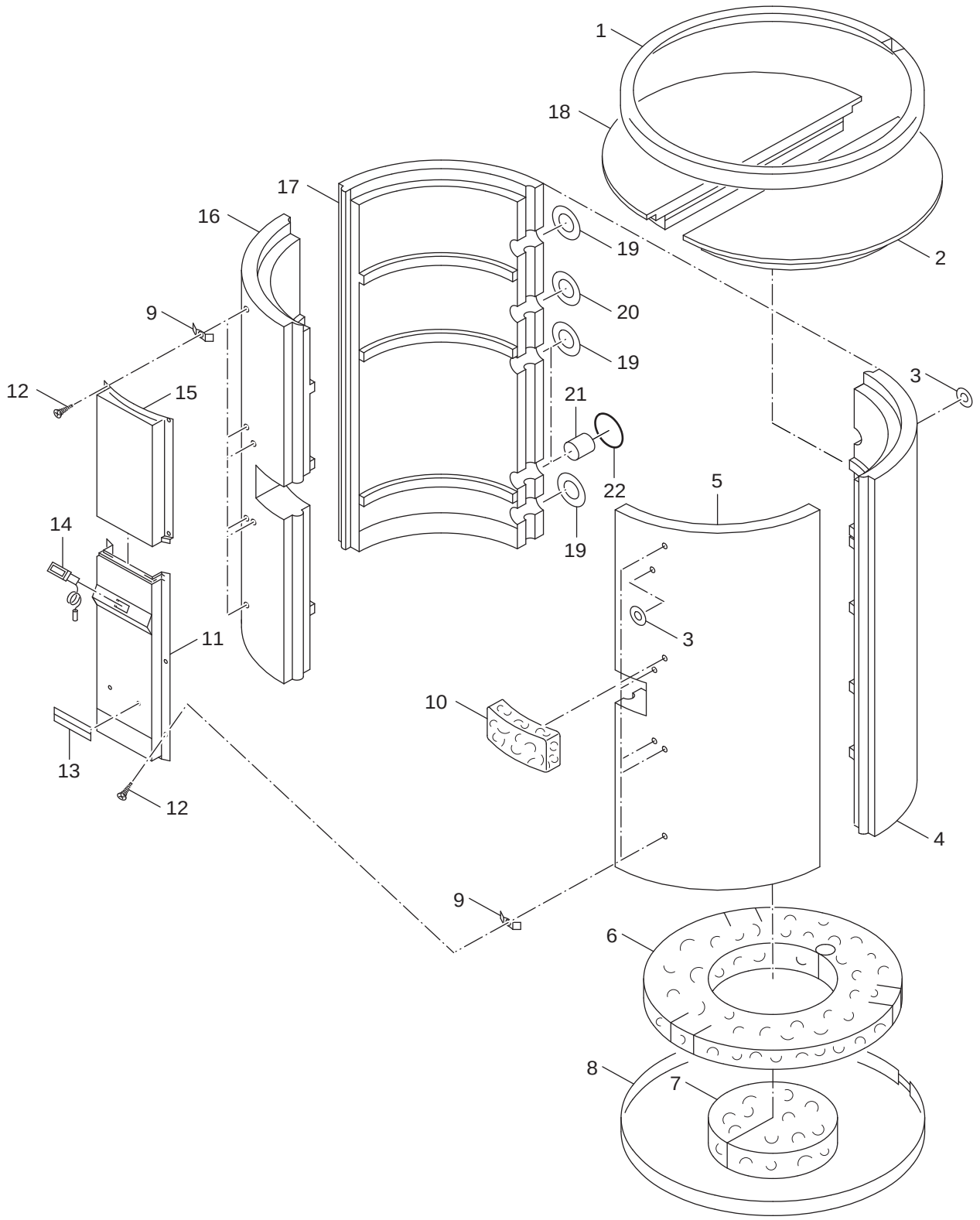

8738890593.aa.RS-Verkleidung ST/DF/SF551

3 **B** Verkleidung ST/DF/SF551 Casing ST/DF/SF551 Carénage ST/DF/SF551 Rivestimento ST/DF/SF551 Bekleding ST/DF/SF551 Revestimiento ST/DF/SF551	**Speicher** **ST151 - 951**

Pos	Bezeichnung description dénomination descrizioni benaming descripción	Bestell-Nr. Ordering no. Numero de commande n° d'ordine Bestelnummer Número el ordenar	ST151 - 951																Bemerkungen Remarks Remarques Osservazioni Opmerkingen Observaciones
1	Spannband oben - ST 551/751 L D 1000	5222706	■																
2	Abdeckung rechts D1000mm ST551/751	5222670	■																
3	Rosette R 1/8" x D60mm ST401-951L	5222730	■																
4	Wärmeschutz Segment 3 ST 551	5222722	■																
5	Wärmeschutz Segment 2 ST 551	5222721	■																
6	Scheibe 830x80mm, ST 551/751 L	5222686	■																
7	Scheibe 350x80mm, ST 551/751/951 L	5222682	■																
8	Spannband unten - ST 551/751 L D 1000	5222704	■																
9	Haltefeder Schaltfeld	5118140	■																
10	Wärmeschutzteil Anlegefühler	5222856	■																
11	Kabelkanal schwarz Narbung "SE" unten	5222832	■																
12	Blechschraube C St4,2x13 A3T (10x)	7 747 027 696	■																
13	Geräteschild (TBS-ISOCAL)	5222980	■																
14	Thermometer kpl 30-80 Grad C°	5236200	■																
15	Kabelkanal ST 551 oben	5222844	■																
16	Wärmeschutz Segment 4 ST 551	5222723	■																
17	Wärmeschutz Segment 1 ST 551	5222720	■																
18	Abdeckung links D1000mm ST551/751	5222672	■																
19	Rosette R 1 1/4" x D120mm ST401-751L	5222736	■																
20	Rosette R 3/4" x D120mm ST401-951L	5222734	■																
21	Füllstück D70x70mm ST401-951	5222985	■																
22	Rosette D120mm	5222737	■																
	Reparaturset 148x210mm	5222090	■																
	Reparaturset 210x297mm	5222092	■																

Speicher
ST151 - 951

Verkleidung ST/DF/SF551
Casing ST/DF/SF551
Carénage ST/DF/SF551
Rivestimento ST/DF/SF551
Bekleding ST/DF/SF551
Revestimiento ST/DF/SF551

3B

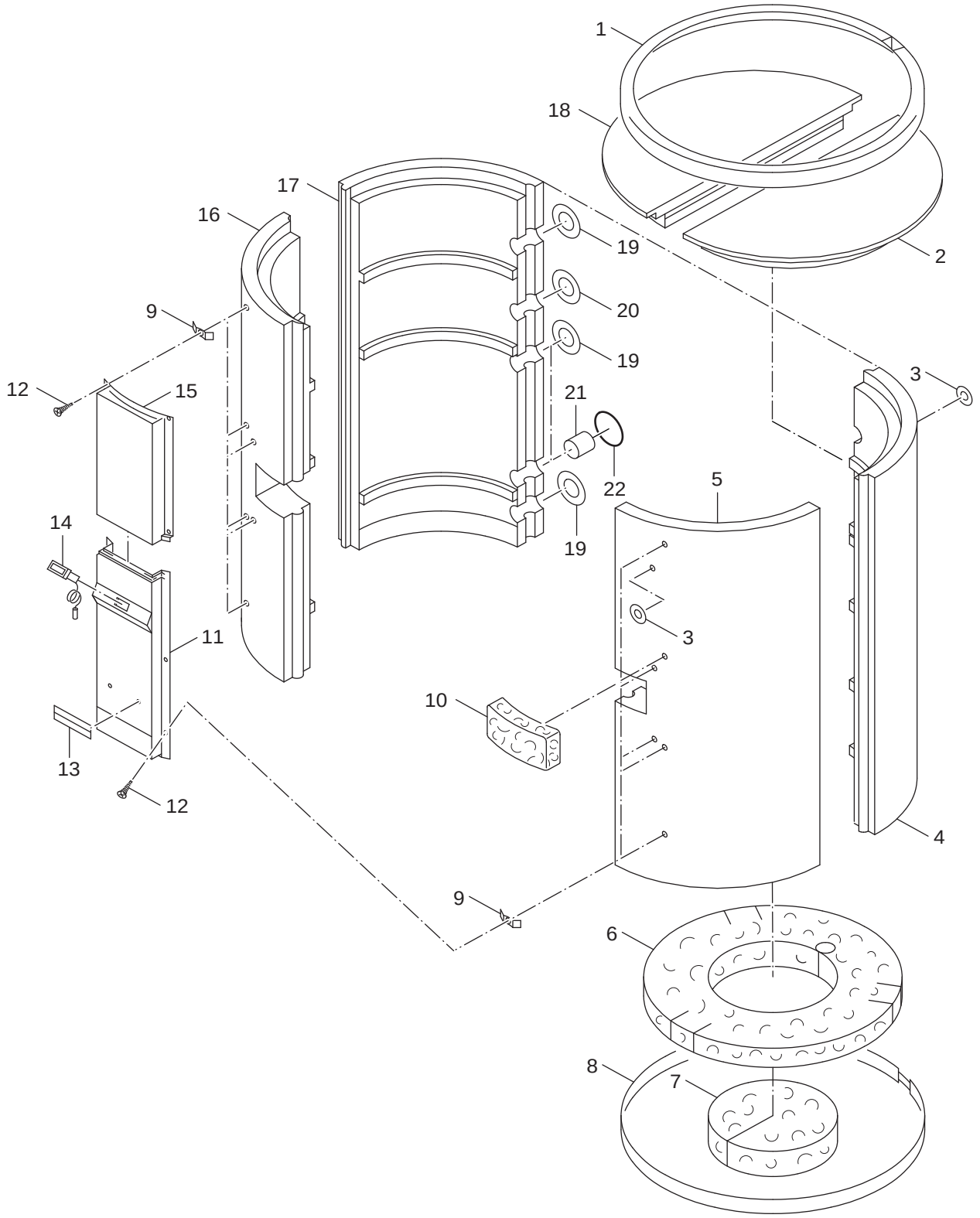

8738890594.aa.RS-Verkleidung ST/DF/SF751

3 **C** Verkleidung ST/DF/SF751 Housing ST/DF/SF751 Carénage ST/DF/SF751 Rivestimento ST/DF/SF751 Bekleding ST/DF/SF751 Revestimiento ST/DF/SF751	**Speicher** **ST151 - 951**

Pos	Bezeichnung description dénomination descrizioni benaming descripción	Bestell-Nr. Ordering no. Numero de commande n° d'ordine Bestelnummer Número el ordenar	ST151 - 951																Bemerkungen Remarks Remarques Osservazioni Opmerkingen Observaciones
1	Spannband oben - ST 551/751 L D 1000	5222706	■																
2	Abdeckung rechts D1000mm ST551/751	5222670	■																
3	Rosette R 1/8" x D60mm ST401-951L	5222730	■																
4	Wärmeschutz Segment 2 ST 751	5222725	■																
5	Wärmeschutz Segment 3 ST 751	5222726	■																
6	Scheibe 830x80mm, ST 551/751 L	5222686	■																
7	Scheibe 350x80mm, ST 551/751/951 L	5222682	■																
8	Spannband unten - ST 551/751 L D 1000	5222704	■																
9	Haltefeder Schaltfeld	5118140	■																
10	Wärmeschutzteil Anlegefühler	5222856	■																
11	Kabelkanal schwarz Narbung "SE" unten	5222832	■																
12	Blechschraube C St4,2x13 A3T (10x)	7 747 027 696	■																
13	Geräteschild (TBS-ISOCAL)	5222980	■																
14	Thermometer kpl 30-80 Grad C°	5236200	■																
15	Kabelkanal ST 751/951 oben	5222845	■																
16	Wärmeschutz Segment 4 ST 751	5222727	■																
17	Wärmeschutz Segment 1 ST 751	5222724	■																
18	Abdeckung links D1000mm ST551/751	5222672	■																
19	Rosette R 1 1/4" x D120mm ST401-751L	5222736	■																
20	Rosette R 3/4" x D120mm ST401-951L	5222734	■																
21	Füllstück D70x70mm ST401-951	5222985	■																
22	Rosette D120mm	5222737	■																
	Reparaturset 148x210mm	5222090	■																
	Reparaturset 210x297mm	5222092	■																

Speicher
ST151 - 951

Verkleidung ST/DF/SF751
Housing ST/DF/SF751
Carénage ST/DF/SF751
Rivestimento ST/DF/SF751
Bekleding ST/DF/SF751
Revestimiento ST/DF/SF751

3C

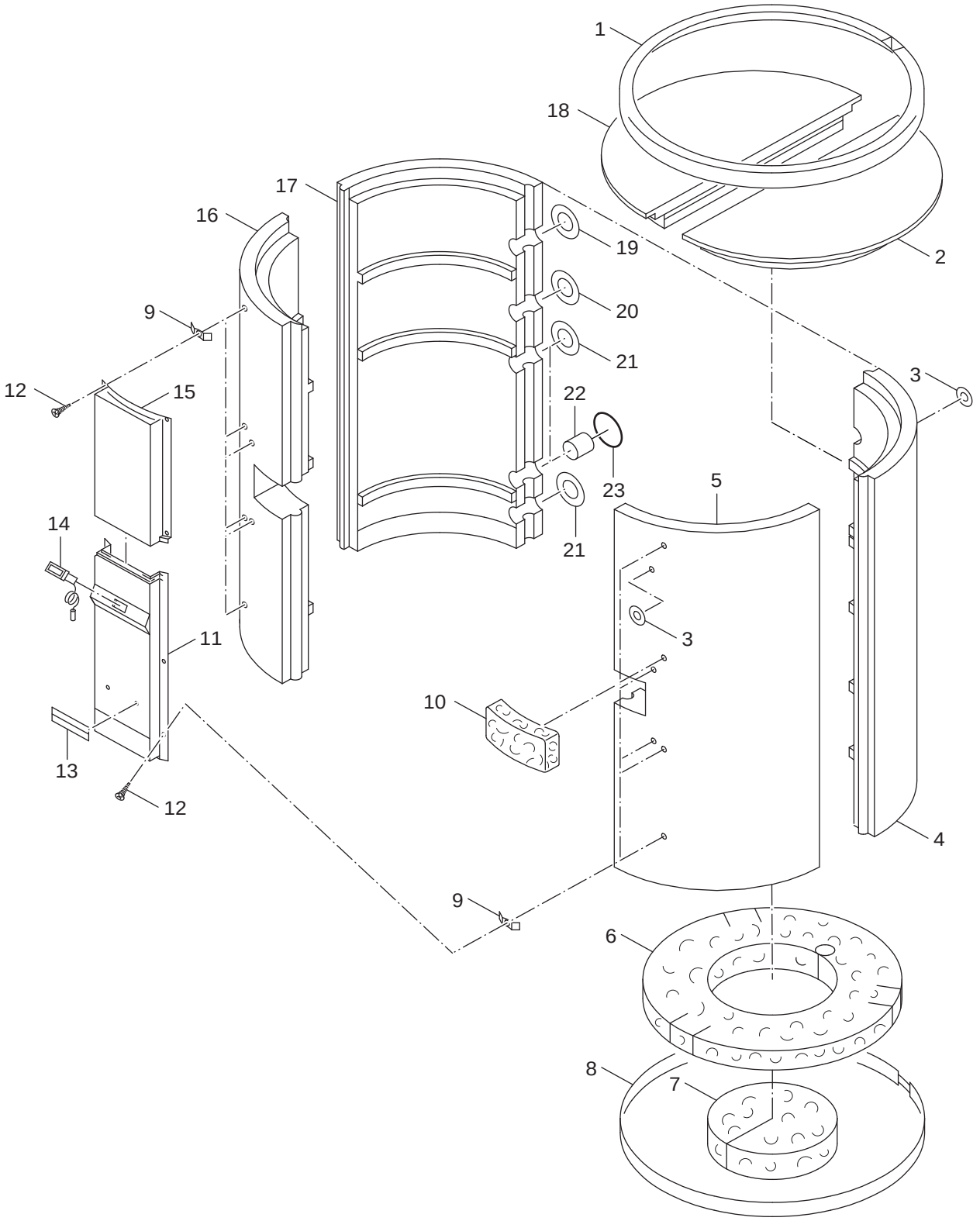

8738890595.aa.RS-Verkleidung ST/DF/SF951

3
D

Verkleidung ST/DF/SF951
Casing ST/DF/SF951
Carénage ST/DF/SF951
Rivestimento ST/DF/SF951
Bekleding ST/DF/SF951
Revestimiento ST/DF/SF951

Speicher
ST151 - 951

Pos	Bezeichnung description dénomination descrizioni benaming descripción	Bestell-Nr. Ordering no. Numero de commande n° d'ordine Bestelnummer Número el ordenar	ST151 - 951																Bemerkungen Remarks Remarques Osservazioni Opmerkingen Observaciones
1	Spannband oben - ST 951 L D1100	5222710	■																
2	Abdeckung rechts ST951	5222674	■																
3	Rosette R 1/8" x D60mm ST401-951L	5222730	■																
4	Wärmeschutz Segment 2 ST 951	5222822	■																
5	Wärmeschutz Segment 3 ST 951	5222823	■																
6	Scheibe 930x80mm, St 951 L	5222690	■																
7	Scheibe 350x80mm, ST 551/751/951 L	5222682	■																
8	Spannband unten - ST 951 L D1100	5222708	■																
9	Haltefeder Schaltfeld	5118140	■																
10	Wärmeschutzteil Anlegefühler	5222856	■																
11	Kabelkanal schwarz Narbung "SE" unten	5222832	■																
12	Blechschraube C St4,2x13 A3T (10x)	7 747 027 696	■																
13	Geräteschild (TBS-ISOCAL)	5222980	■																
14	Thermometer kpl 30-80 Grad C°	5236200	■																
15	Kabelkanal ST 751/951 oben	5222845	■																
16	Wärmeschutz Segment 4 ST 951	5222824	■																
17	Wärmeschutz Segment 1 ST 951	5222821	■																
18	Abdeckung links ST951 L	5222676	■																
19	Rosette R 1 1/2"xD120 mm (St 951)	5222738	■																
20	Rosette R 3/4" x D120mm ST401-951L	5222734	■																
21	Rosette R 1 1/4" x D120mm ST401-751L	5222736	■																
22	Füllstück D70x70mm ST401-951	5222985	■																
23	Rosette D120mm	5222737	■																
	Reparaturset 148x210mm	5222090	■																
	Reparaturset 210x297mm	5222092	■																

Speicher
ST151 - 951

Verkleidung ST/DF/SF951
Casing ST/DF/SF951
Carénage ST/DF/SF951
Rivestimento ST/DF/SF951
Bekleding ST/DF/SF951
Revestimiento ST/DF/SF951

3D

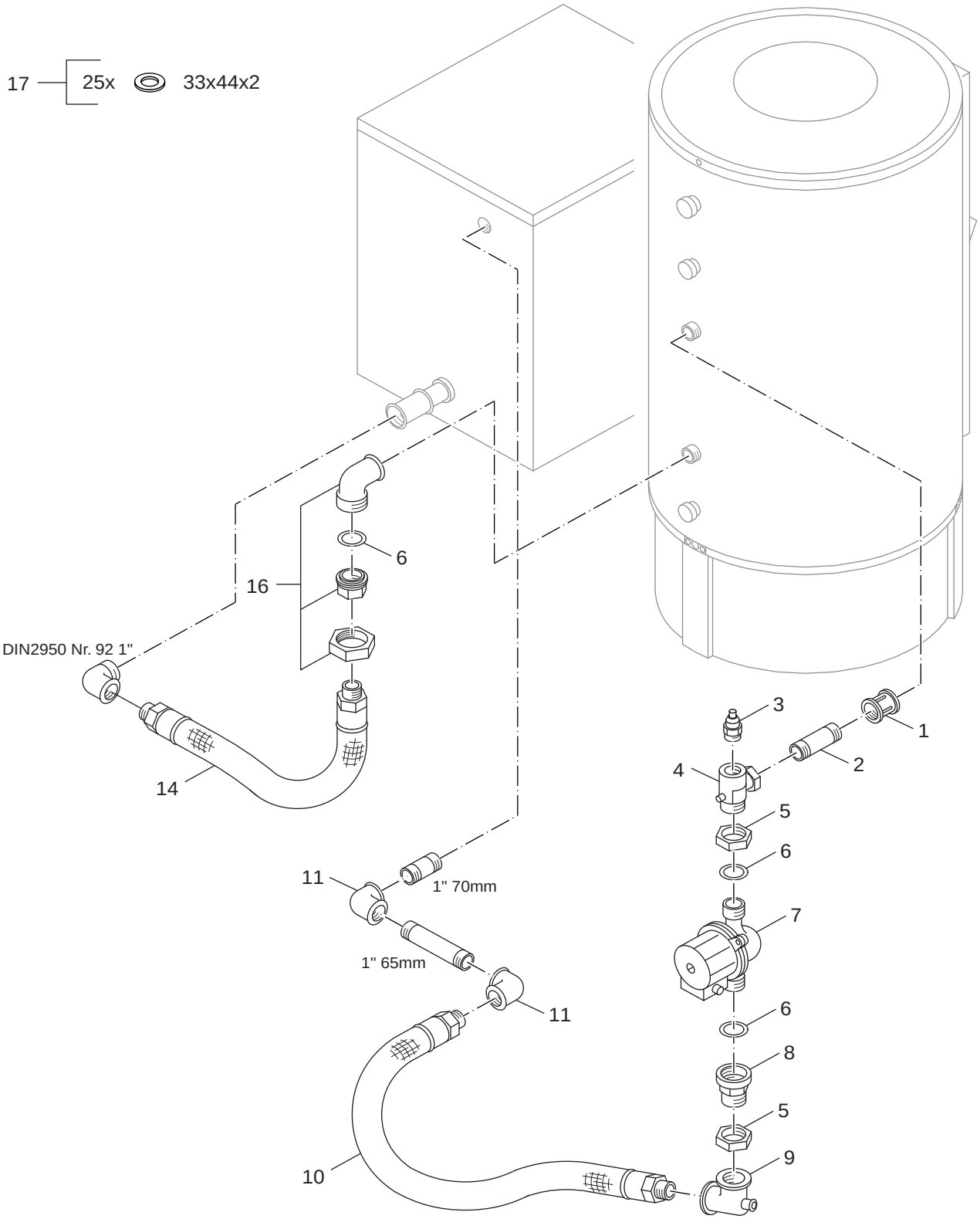

8738890596.aa.RS-Rohrgruppe G105 ST151-951

4 **A** Rohrgruppe G105 Pipe assembly G105 Conduites de groupe G105 Gruppo tubazioni G105 Leidinggroep G105 Conjunto de tubos G105	**Speicher** **ST151 - 951**

Pos	Bezeichnung description dénomination descrizioni benaming descripción	Bestell-Nr. Ordering no. Numero de commande n° d'ordine Bestelnummer Número el ordenar	ST151 - 951																Bemerkungen Remarks Remarques Osservazioni Opmerkingen Observaciones
1	Muffe DIN2950 N°270 1"	311707	■																
2	Rohr-Doppelnippel 33,7x2,9x121mm	11016340	■																
3	Entlüftungsventil 3/8"	5366495	■																
4	Sperr-und Entlüftungsanschluss	5447120	■																
5	Überwurfmutter G1 1/2"	5222988	■																
6	Dichtungs-Set D32x44x2 AFM34 (5x)	8 718 660 766 0	■																
7	Pumpe RS25/6-3 180 9H universal	63002480	■																
7	Pumpe UPS25-60 180 9H universal	63002481	■																
8	Einlegeteil DIN2950 N°371 1"	324376	■																
9	T-Stück DIN2950 130 1"x1"x1/2"	315169	■																
10	Flex-Pan-Schl-DN25x800 1" mit Einschraubteil	5468215	■																
11	Winkel DIN2950 N° 90 1"	314006	■																
14	Schlauch flexibel DN25x950lg R1"-R1"	913071	■																
16	Winkelverschraubung DIN2950 N° 95 1" V	5875802	■																
17	Dichtungssatz Kessel-Speicherverrohrung	5909255	■																

Speicher
ST151 - 951

Rohrgruppe G105
Pipe assembly G105
Conduites de groupe G105
Gruppo tubazioni G105
Leidinggroep G105
Conjunto de tubos G105

4A

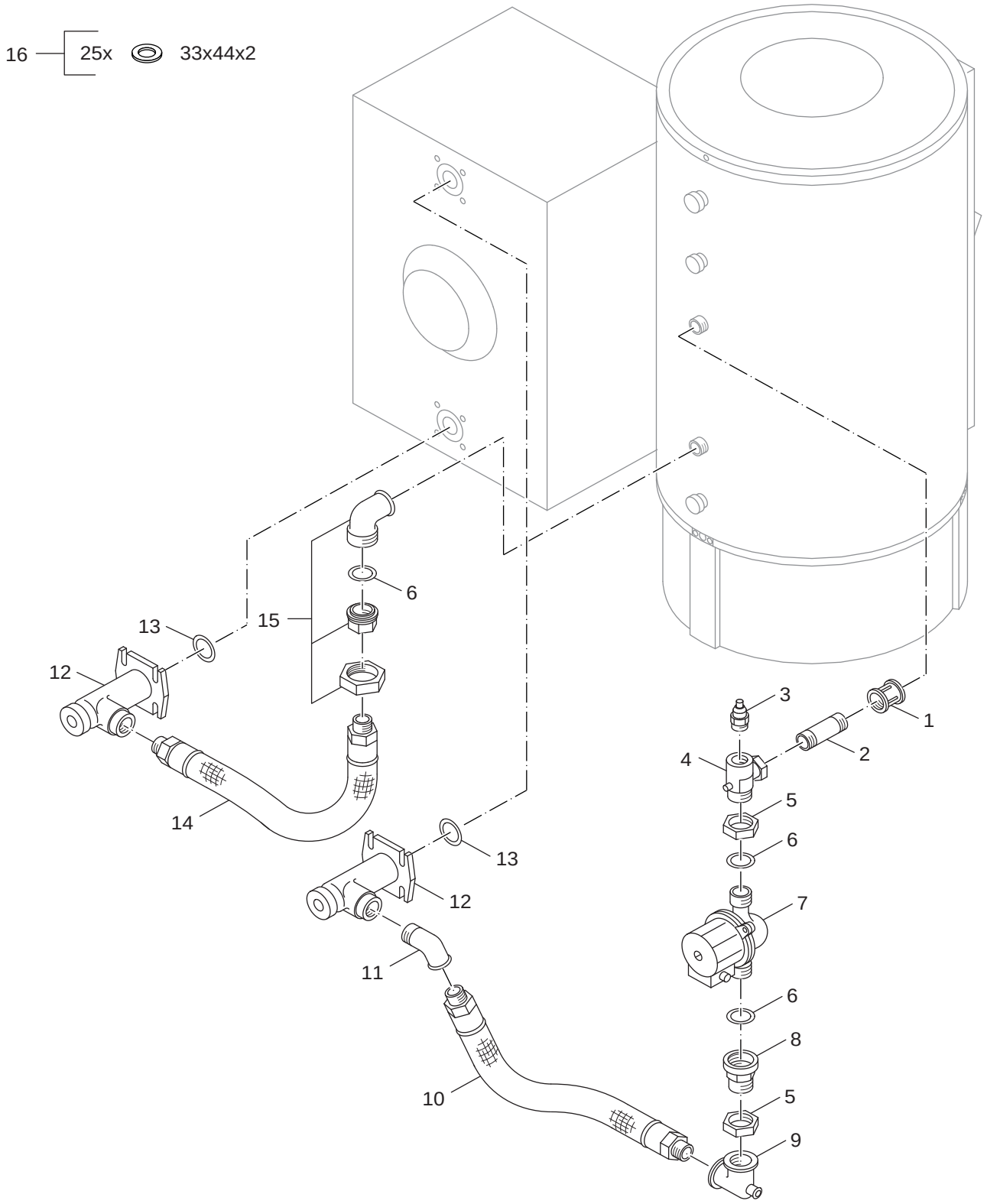

8738890597.aa.RS-Rohrgruppe G205 ST151-951

4 **B** Rohrgruppe G205 Pipe assembly G205 Conduites de groupe G205 Gruppo tubazioni G205 Leidinggroep G205 Conjunto de tubos G205	**Speicher** **ST151 - 951**

Pos	Bezeichnung description dénomination descrizioni benaming descripción	Bestell-Nr. Ordering no. Numero de commande n° d'ordine Bestelnummer Número el ordenar	ST151 - 951																Bemerkungen Remarks Remarques Osservazioni Opmerkingen Observaciones
1	Muffe DIN2950 N°270 1"	311707	■																
2	Rohr-Doppelnippel 33,7x2,9x121mm	11016340	■																
3	Entlüftungsventil 3/8"	5366495	■																
4	Sperr-und Entlüftungsanschluss	5447120	■																
5	Überwurfmutter G1 1/2"	5222988	■																
6	Dichtungs-Set D32x44x2 AFM34 (5x)	8 718 660 766 0	■																
7	Pumpe RS25/6-3 180 9H universal	63002480	■																
7	Pumpe UPS25-60 180 9H universal	63002481	■																
8	Einlegeteil DIN2950 N°371 1"	324376	■																
9	T-Stück DIN2950 130 1"x1"x1/2"	315169	■																
10	Flex-Pan-Schl-DN25x800 1" mit Einschraubteil	5468215	■																
11	Winkel DIN2950 N° 90 1"	314006	■																
12	Anschl-Formst G205/TG34-66 geb	5538272	■																
13	Dichtung D57x96x1,5mm	2515165	■																
14	Schlauch flexibel DN25x950lg R1"-R1"	913071	■																
15	Winkelverschraubung DIN2950 N° 95 1" V	5875802	■																
16	Dichtungssatz Kessel-Speicherverrohrung	5909255	■																

Speicher
ST151 - 951

Rohrgruppe G205
Pipe assembly G205
Conduites de groupe G205
Gruppo tubazioni G205
Leidinggroep G205
Conjunto de tubos G205

4B

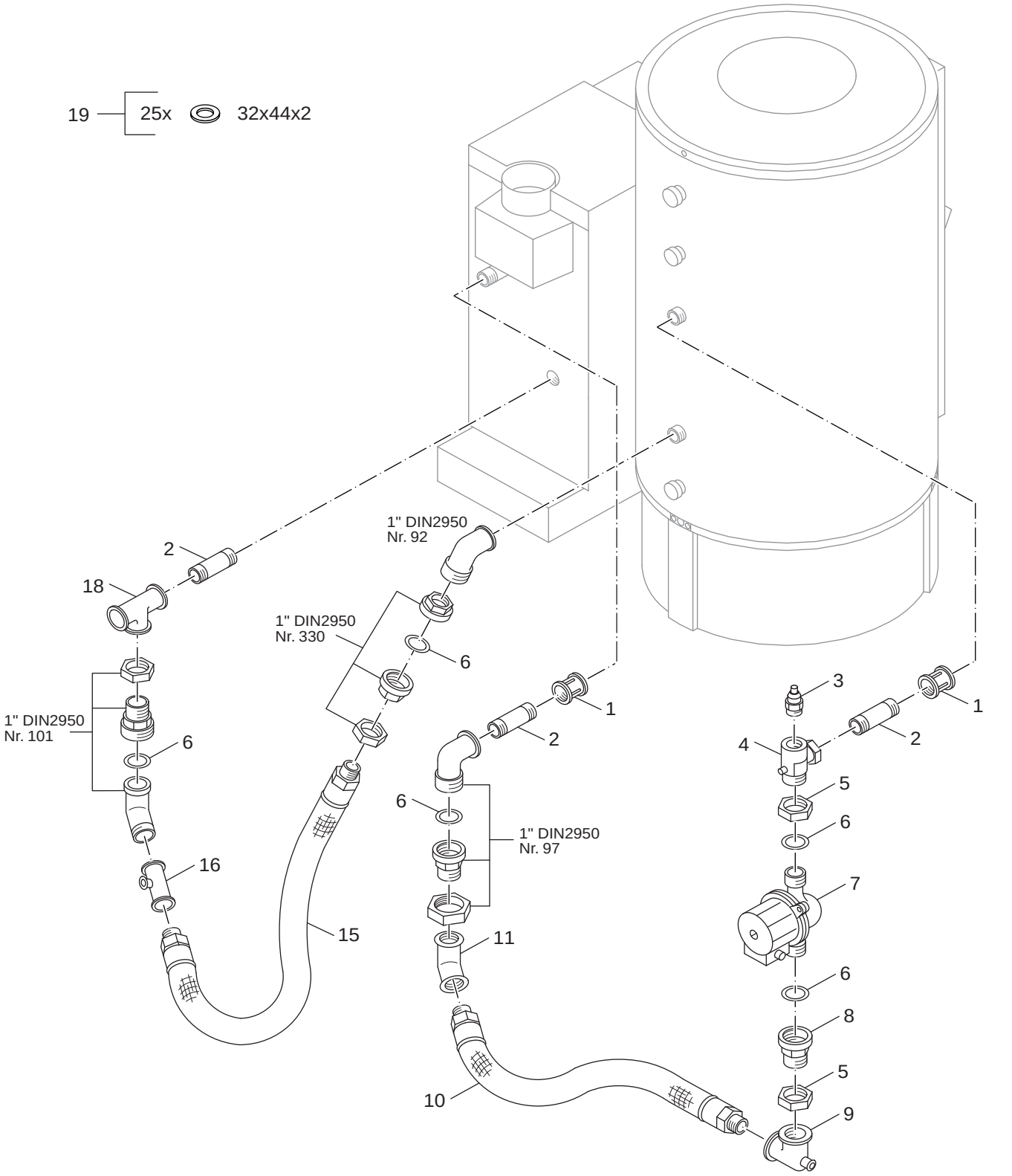

8738890598.aa.RS-Rohrgruppe G124 ST151-951

4 **C** Rohrgruppe G124 Pipe assembly G124 Conduites de groupe G124 Gruppo tubazioni G124 Leidinggroep G124 Conjunto de tubos G124	**Speicher** **ST151 - 951**

Pos	Bezeichnung description dénomination descrizioni benaming descripción	Bestell-Nr. Ordering no. Numero de commande n° d'ordine Bestelnummer Número el ordenar	ST151 - 951																Bemerkungen Remarks Remarques Osservazioni Opmerkingen Observaciones
1	Muffe DIN2950 N°270 1"	311707	■																
2	Rohr-Doppelnippel 33,7x2,9x121mm	11016340	■																
3	Entlüftungsventil 3/8"	5366495	■																
4	Sperr-und Entlüftungsanschluss	5447120	■																
5	Überwurfmutter G1 1/2"	5222988	■																
6	Dichtungs-Set D32x44x2 AFM34 (5x)	8 718 660 766 0	■																
7	Pumpe RS25/6-3 180 9H universal	63002480	■																
7	Pumpe UPS25-60 180 9H universal	63002481	■																
8	Einlegeteil DIN2950 N°371 1"	324376	■																
9	Winkel DIN2950 N° 90 1"	314006	■																
10	Schlauch flexibel DN25x950lg R1"-R1"	913071	■																
11	T-Stück DIN2950 130 1"x1"x1/2"	315169	■																
15	Flex-Pan-Schl-DN25x800 1" mit Einschraubteil	5468215	■																
16	T-Stück DIN2950 130 1"x1"x1/2"	315169	■																
18	T-Stück DIN2950 N°130 1 1/2"x1"x1 1/2" V	80674037	■																
19	Dichtungssatz Kessel-Speicherverrohrung	5909255	■																

Speicher
ST151 - 951

Rohrgruppe G124
Pipe assembly G124
Conduites de groupe G124
Gruppo tubazioni G124
Leidinggroep G124
Conjunto de tubos G124

4C

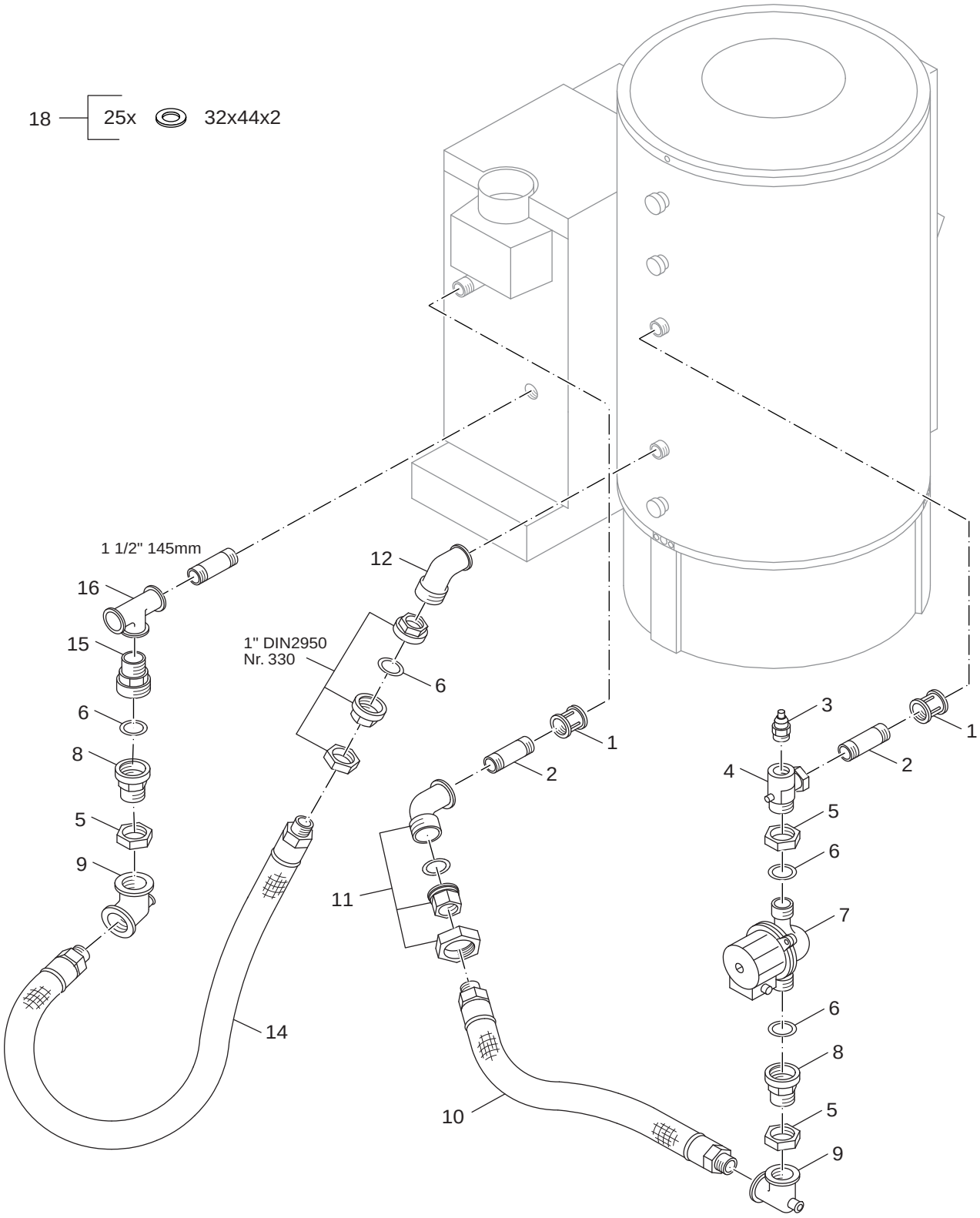

8738890599.aa.RS-Rohrgruppe G224 ST151-951

4 **D** Rohrgruppe G224 Pipe assembly G224 Conduites de groupe G224 Gruppo tubazioni G224 Leidinggroep G224 Conjunto de tubos G224	**Speicher** **ST151 - 951**

Pos	Bezeichnung description dénomination descrizioni benaming descripción	Bestell-Nr. Ordering no. Numero de commande n° d'ordine Bestelnummer Número el ordenar	ST151 - 951																Bemerkungen Remarks Remarques Osservazioni Opmerkingen Observaciones
1	Muffe DIN2950 N°270 1"	311707	■																
2	Rohr-Doppelnippel 33,7x2,9x121mm	11016340	■																
3	Entlüftungsventil 3/8"	5366495	■																
4	Sperr-und Entlüftungsanschluss	5447120	■																
5	Überwurfmutter G1 1/2"	5222988	■																
6	Dichtungs-Set D32x44x2 AFM34 (5x)	8 718 660 766 0	■																
7	Pumpe RS25/6-3 180 9H universal	63002480	■																
7	Pumpe UPS25-60 180 9H universal	63002481	■																
8	Einlegeteil DIN2950 N°371 1"	324376	■																
9	Winkel DIN2950 N° 90 1"	314006	■																
10	Schlauch flexibel DN25x950lg R1"-R1"	913071	■																
11	Winkelverschraubung DIN2950 N° 95 1" V	5875802	■																
12	Winkel DIN2950 N°121 1"	314284	■																
14	Flex-Pan-Schl-DN25x800 1" mit Einschraubteil	5468215	■																
15	Einschraubteil DIN2950 N°376 1"	324356	■																
16	T-Stück DIN2950 N°130 1 1/2"x1"x1 1/2" V	80674037	■																
18	Dichtungssatz Kessel-Speicherverrohrung	5909255	■																

Speicher
ST151 - 951

Rohrgruppe G224
Pipe assembly G224
Conduites de groupe G224
Gruppo tubazioni G224
Leidinggroep G224
Conjunto de tubos G224

4D

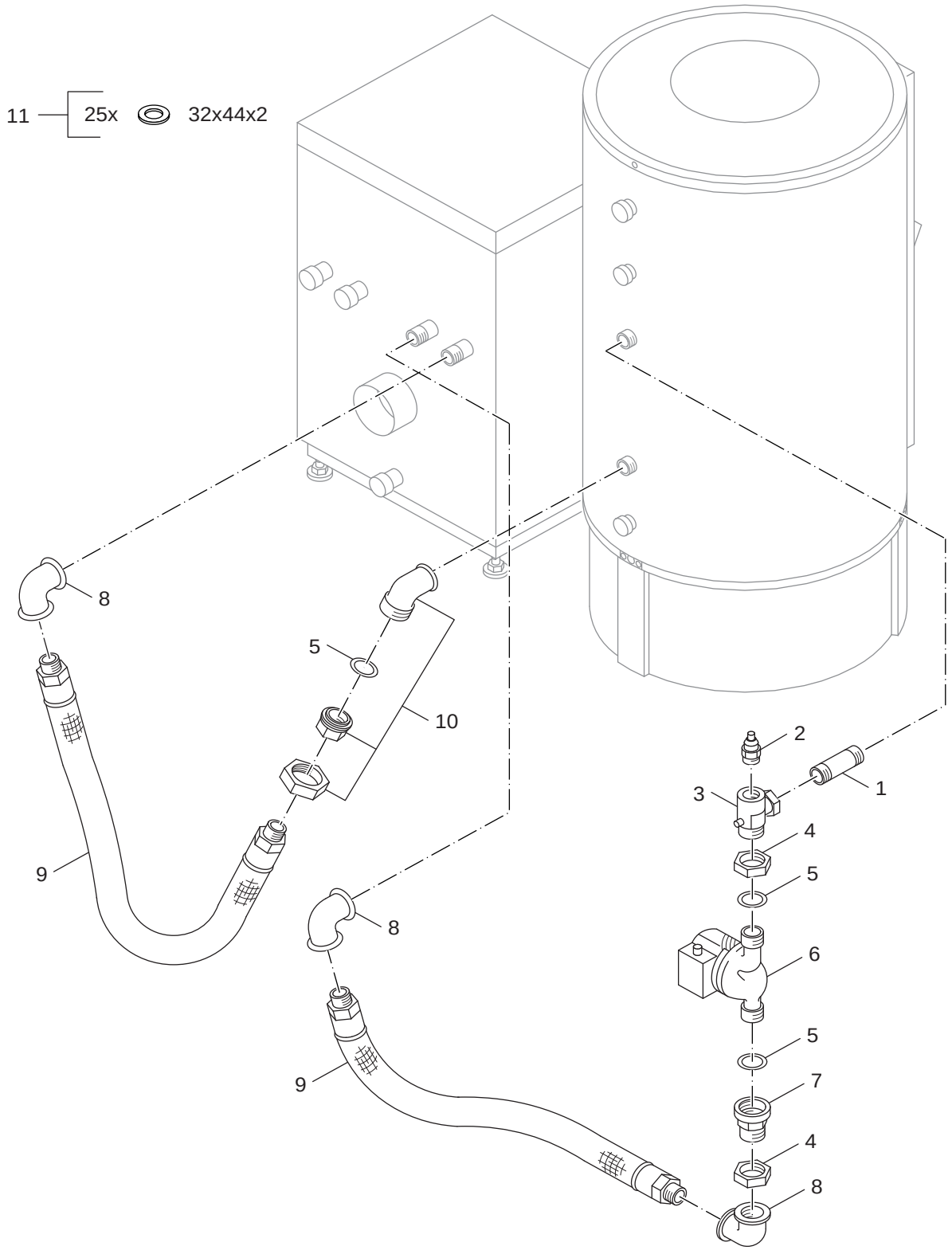

8738890600.aa.RS-Rohrgruppe S305/315 Gr. 17-28 ST151-951

4 **E** Rohrgruppe S305/315 17-28kW Pipe assembly S305/315 17-28kW Conduites de groupe S305/315 17-28kW Gruppo tubazioni S305/315 17-28kW Leidinggroep S305/315 17-28kW Conjunto de tubos S305/315 17-28kW	**Speicher** **ST151 - 951**

Pos	Bezeichnung description dénomination descrizioni benaming descripción	Bestell-Nr. Ordering no. Numero de commande n° d'ordine Bestelnummer Número el ordenar	ST151 - 951																Bemerkungen Remarks Remarques Osservazioni Opmerkingen Observaciones
1	Verlängerung DIN2950 N°526 1"x100mm	320848	■																
2	Entlüftungsventil 3/8"	5366495	■																
3	Sperr-und Entlüftungsanschluss	5447120	■																
4	Überwurfmutter G1 1/2"	5222988	■																
5	Dichtungs-Set D32x44x2 AFM34 (5x)	8 718 660 766 0	■																
6	Pumpe RS25/6-3 180 9H universal	63002480	■																
6	Pumpe UPS25-60 180 9H universal	63002481	■																
7	Einlegeteil DIN2950 N°371 1"	324376	■																
8	Winkel DIN2950 N° 90 1"	314006	■																
9	Flex-Pan-Schl-DN25x800 1" mit Einschraubteil	5468215	■																
10	Winkelverschraubung DIN2950 N° 95 1" V	5875802	■																
11	Dichtungssatz Kessel-Speicherverrohrung	5909255	■																

Speicher
ST151 - 951

Rohrgruppe S305/315 17-28kW
Pipe assembly S305/315 17-28kW
Conduites de groupe S305/315 17-28kW
Gruppo tubazioni S305/315 17-28kW
Leidinggroep S305/315 17-28kW
Conjunto de tubos S305/315 17-28kW

4E

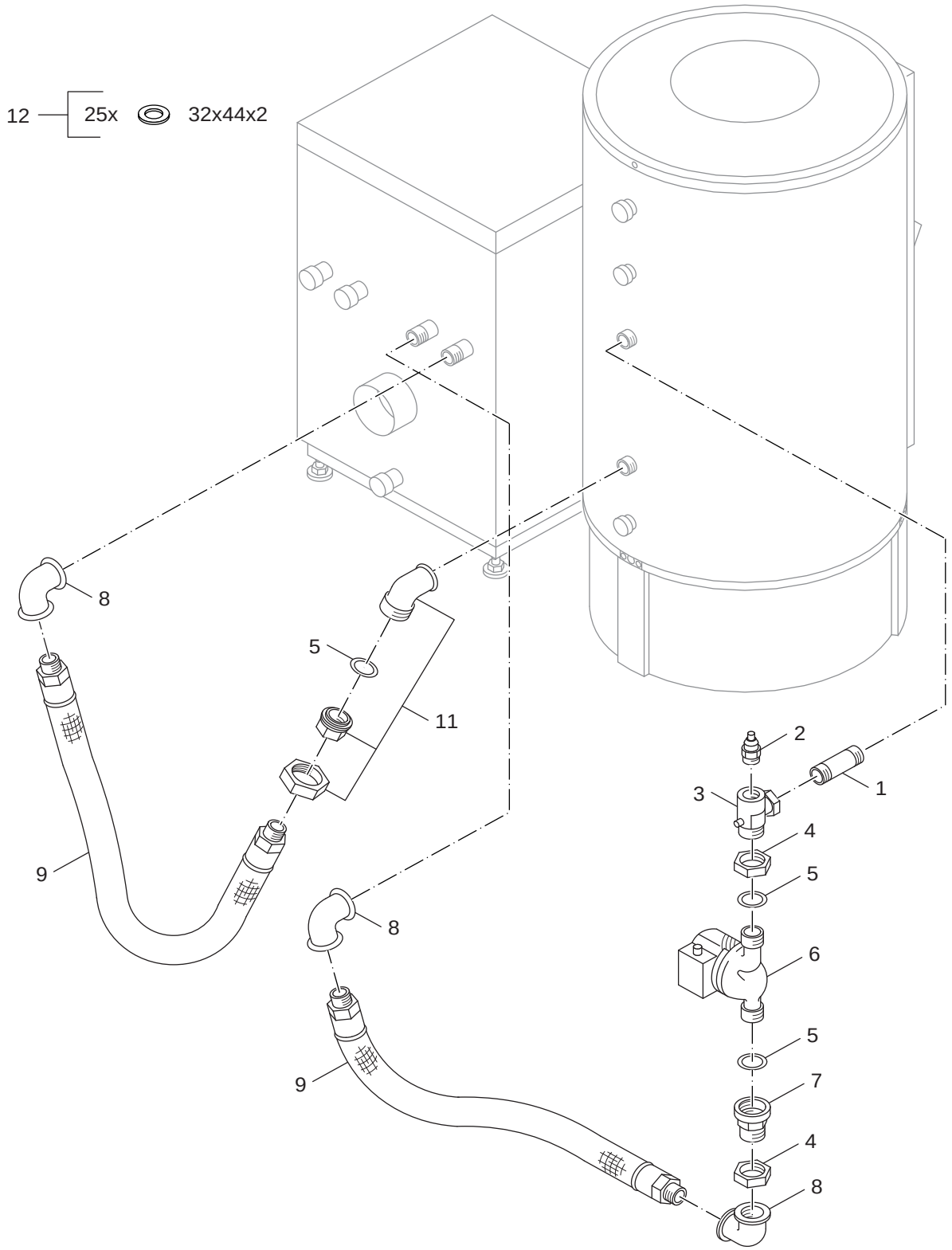

8738890601.aa.RS-Rohrgruppe S305/315 Gr. 35-43 ST151-951

4 **F**	Rohrgruppe S305/315 35-43kW Pipe assembly S305/315 35-43kW Conduites de groupe S305/315 35-43kW Gruppo tubazioni S305/315 35-43kW Leidinggroep S305/315 35-43kW Conjunto de tubos S305/315 35-43kW	**Speicher** **ST151 - 951**

Pos	Bezeichnung description dénomination descrizioni benaming descripción	Bestell-Nr. Ordering no. Numero de commande n° d'ordine Bestelnummer Número el ordenar	ST151 - 951																Bemerkungen Remarks Remarques Osservazioni Opmerkingen Observaciones
1	Verlängerung DIN2950 N°526 1"x100mm	320848	■																
2	Entlüftungsventil 3/8"	5366495	■																
3	Sperr-und Entlüftungsanschluss	5447120	■																
4	Überwurfmutter G1 1/2"	5222988	■																
5	Dichtungs-Set D32x44x2 AFM34 (5x)	8 718 660 766 0	■																
6	Pumpe RS25/6-3 180 9H universal	63002480	■																
6	Pumpe UPS25-60 180 9H universal	63002481	■																
7	Einlegeteil DIN2950 N°371 1"	324376	■																
8	Winkel DIN2950 N° 90 1"	314006	■																
9	Schlauch flexibel DN25x950mm R1"-R1"	913071	■																
11	Winkelverschraubung DIN2950 N° 95 1" V	5875802	■																
12	Dichtungssatz Kessel-Speicherverrohrung	5909255	■																

Speicher
ST151 - 951

Rohrgruppe S305/315 35-43kW
Pipe assembly S305/315 35-43kW
Conduites de groupe S305/315 35-43kW
Gruppo tubazioni S305/315 35-43kW
Leidinggroep S305/315 35-43kW
Conjunto de tubos S305/315 35-43kW

4F

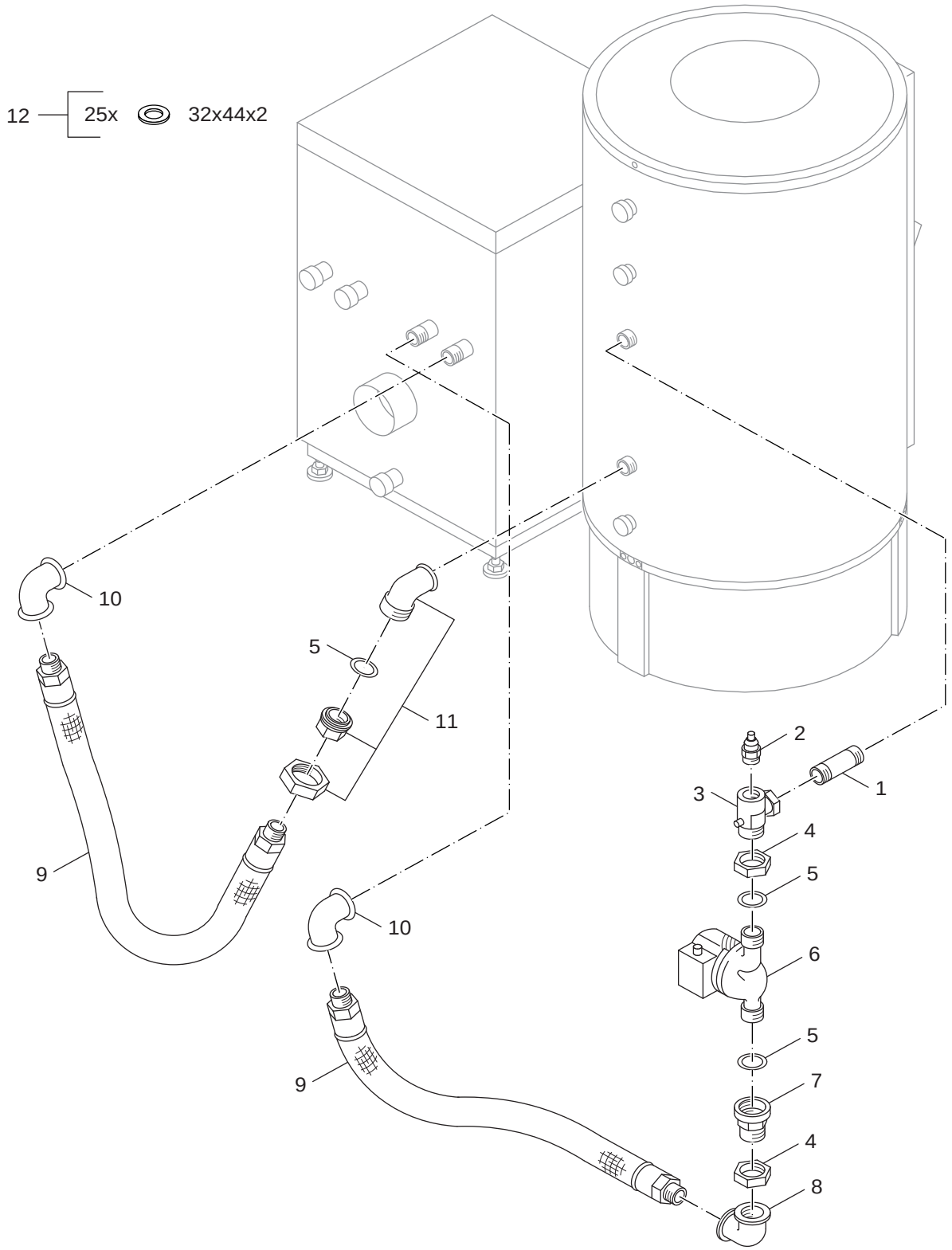

8738890602.aa.RS-Rohrgruppe S305/315 Gr. 55-70 ST151-951

4 **G**	Rohrgruppe S305/315 55-70kW Pipe assembly S305/315 55-70kW Conduites de groupe S305/315 55-70kW Gruppo tubazioni S305/315 55-70kW Leidinggroep S305/315 55-70kW Conjunto de tubos S305/315 55-70kW	**Speicher** **ST151 - 951**

Pos	Bezeichnung description dénomination descrizioni benaming descripción	Bestell-Nr. Ordering no. Numero de commande n° d'ordine Bestelnummer Número el ordenar	ST151 - 951																Bemerkungen Remarks Remarques Osservazioni Opmerkingen Observaciones
1	Verlängerung DIN2950 N°526 1"x100mm	320848	■																
2	Entlüftungsventil 3/8"	5366495	■																
3	Sperr-und Entlüftungsanschluss	5447120	■																
4	Überwurfmutter G1 1/2"	5222988	■																
5	Dichtungs-Set D32x44x2 AFM34 (5x)	8 718 660 766 0	■																
6	Pumpe RS25/6-3 180 9H universal	63002480	■																
6	Pumpe UPS25-60 180 9H universal	63002481	■																
7	Einlegeteil DIN2950 N°371 1"	324376	■																
8	Winkel DIN2950 N° 90 1"	314006	■																
9	Schlauch flexibel DN25x950mm R1"-R1"	913071	■																
10	Winkel DIN2950 N° 90 1"	314006	■																
11	Winkelverschraubung DIN2950 N° 95 1" V	5875802	■																
12	Dichtungssatz Kessel-Speicherverrohrung	5909255	■																

Speicher
ST151 - 951

Rohrgruppe S305/315 55-70kW
Pipe assembly S305/315 55-70kW
Conduites de groupe S305/315 55-70kW
Gruppo tubazioni S305/315 55-70kW
Leidinggroep S305/315 55-70kW
Conjunto de tubos S305/315 55-70kW

4G

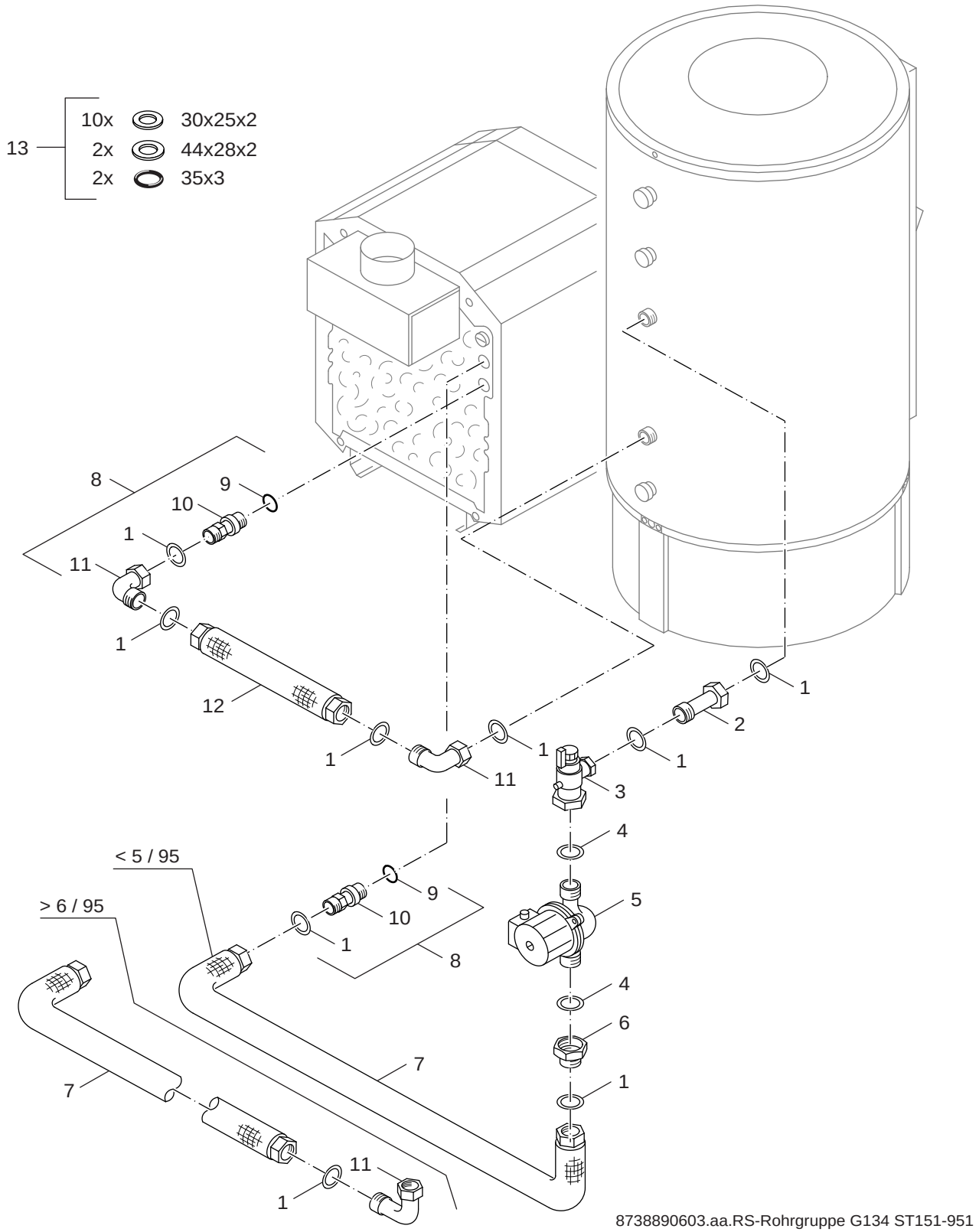

8738890603.aa.RS-Rohrgruppe G134 ST151-951

4 **H** Rohrgruppe G134 Pipe assembly G134 Conduites de groupe G134 Gruppo tubazioni G134 Leidinggroep G134 Conjunto de tubos G134	**Speicher** **ST151 - 951**

Pos	Bezeichnung description dénomination descrizioni benaming descripción	Bestell-Nr. Ordering no. Numero de commande n° d'ordine Bestelnummer Número el ordenar	ST151 - 951																Bemerkungen Remarks Remarques Osservazioni Opmerkingen Observaciones
1	Dichtung D24x30,5x2 AFM34 (10x)	7 747 016 507	■																
2	Verlängerung G1"x 80mm	67900919	■																
3	Rückschlagventil Eckform G1-1 1/2"	67900918	■																
4	Dichtung D28x44x2 EPDM (5x)	63010122	■																
5	Pumpe RS25/6-3 180 9H universal	63002480	■																
5	Pumpe UPS25-60 180 9H universal	63002481	■																
6	Reduzierstück G1 1/2" x G1"	5681100	■																
7	Metallwellschlauch DN25 800mm	67901388	■																
8	Doppelnippel G1"xG1" 89mm	63010913	■																
9	O-Ring Set 35x3 (5x)	7 747 027 431	■																
10	Doppelnippel G1"xG1" 89mm	63010913	■																
11	Winkel G 1"	67900914	■																
12	Metallwellschlauch DN25 635mm	67901385	■																
13	Dichtungssatz LT/ST	5909260	■																

Speicher
ST151 - 951

Rohrgruppe G134
Pipe assembly G134
Conduites de groupe G134
Gruppo tubazioni G134
Leidinggroep G134
Conjunto de tubos G134

4H

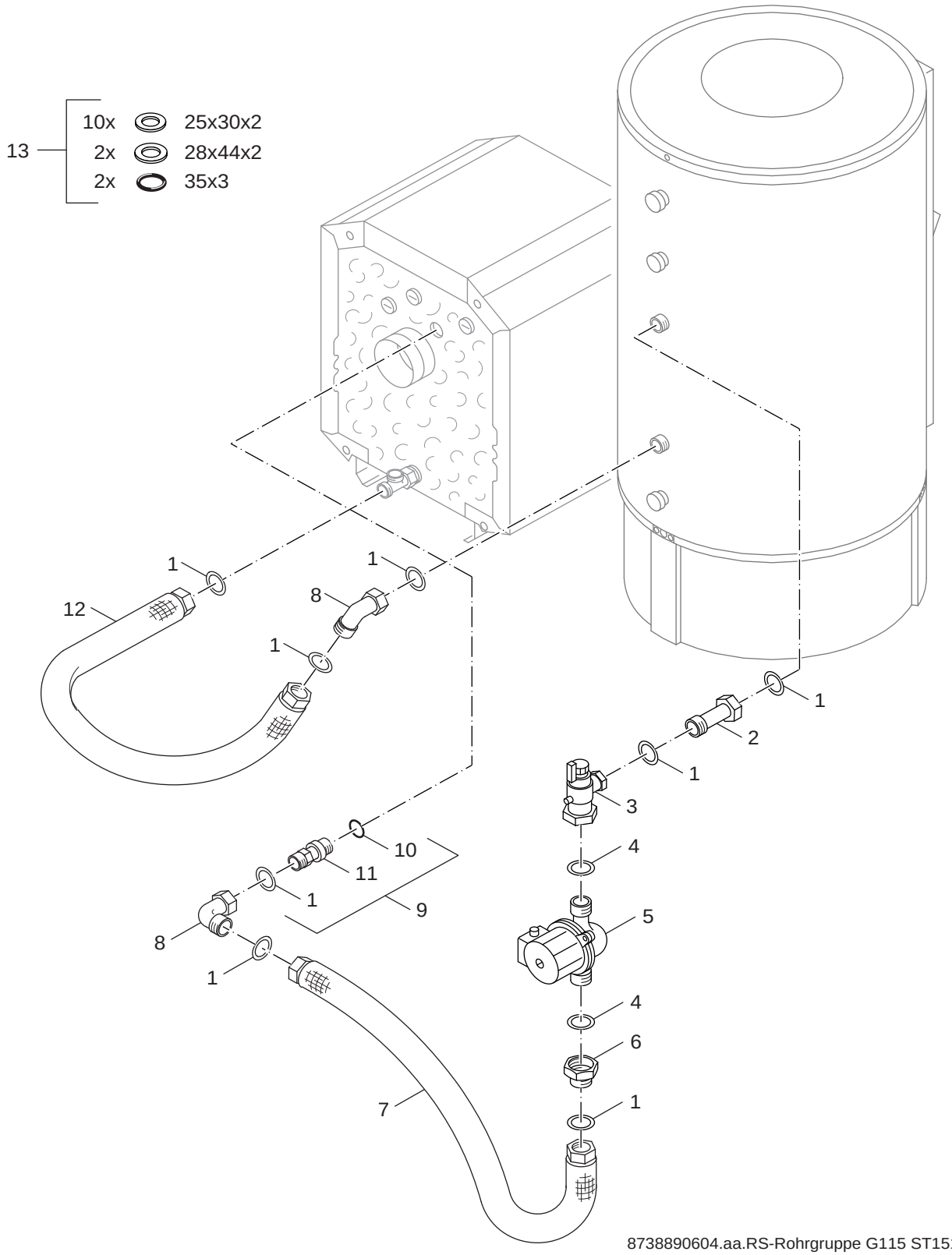

8738890604.aa.RS-Rohrgruppe G115 ST151-951

5 **A** Rohrgruppe G115 Pipe assembly G115 Conduites de groupe G115 Gruppo tubazioni G115 Leidinggroep G115 Conjunto de tubos G115	**Speicher** **ST151 - 951**

Pos	Bezeichnung description dénomination descrizioni benaming descripción	Bestell-Nr. Ordering no. Numero de commande n° d'ordine Bestelnummer Número el ordenar	ST151 - 951																Bemerkungen Remarks Remarques Osservazioni Opmerkingen Observaciones
1	Dichtung D24x30,5x2 AFM34 (10x)	7 747 016 507	■																
2	Verlängerung G1"x 80mm	67900919	■																
3	Rückschlagventil Eckform G1-1 1/2"	67900918	■																
4	Dichtung D28x44x2 EPDM (5x)	63010122	■																
5	Pumpe RS25/6-3 180 9H universal	63002480	■																
5	Pumpe UPS25-60 180 9H universal	63002481	■																
6	Reduzierstück G1 1/2" x G1"	5681100	■																
7	Metallwellschlauch DN25 800mm	67901388	■																
8	Winkel G 1"	67900914	■																
9	Doppelnippel G1"xG1" 65mm	63010912	■																
10	O-Ring Set 35x3 (5x)	7 747 027 431	■																
11	Doppelnippel G1"xG1" 65mm	63010912	■																
12	Metallwellschlauch DN25 950mm	67903097	■																
13	Dichtungssatz LT/ST	5909260	■																

Speicher
ST151 - 951

Rohrgruppe G115
Pipe assembly G115
Conduites de groupe G115
Gruppo tubazioni G115
Leidinggroep G115
Conjunto de tubos G115

5A

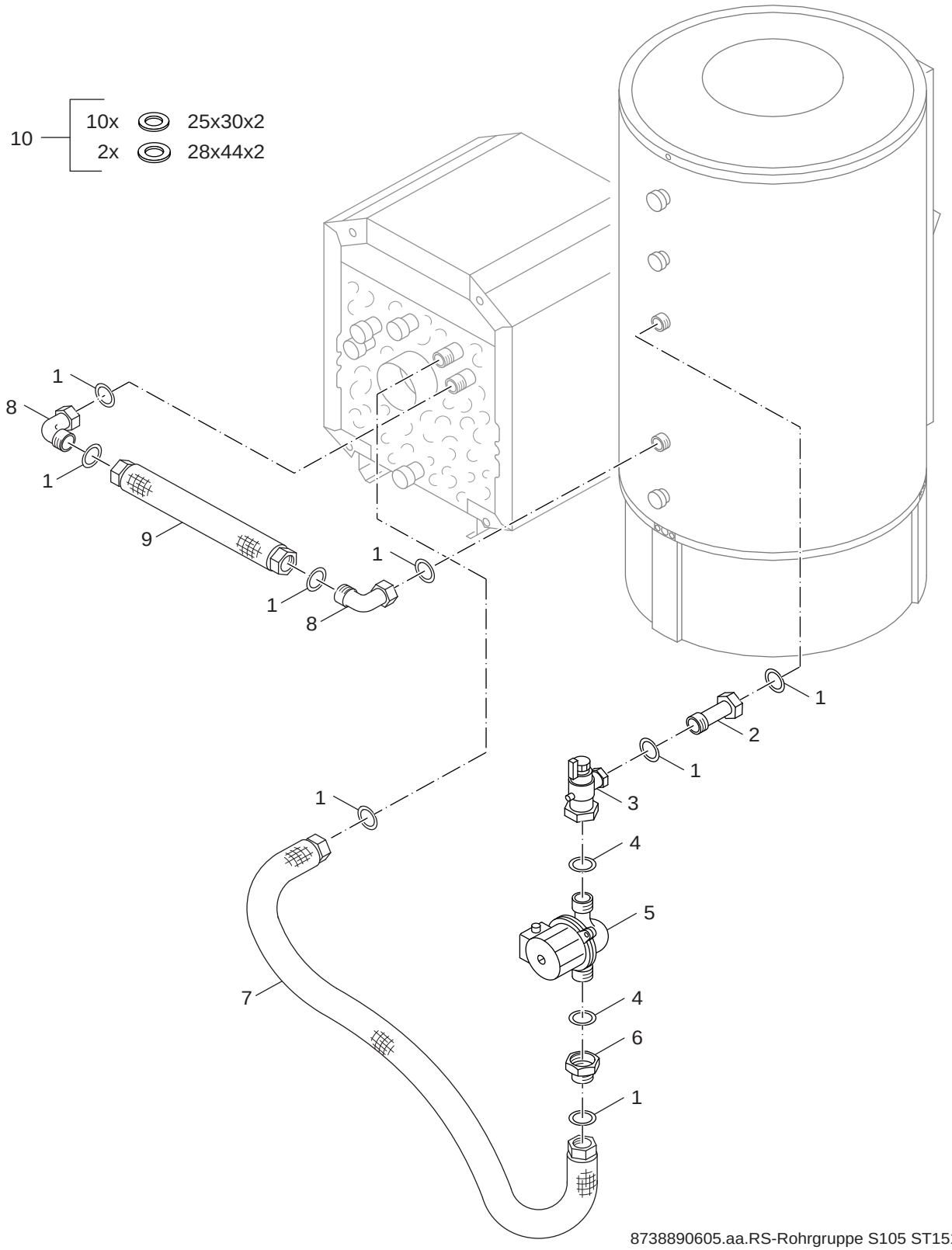

8738890605.aa.RS-Rohrgruppe S105 ST151-951

5 **B** Rohrgruppe S105 Pipe assembly S105 Conduites de groupe S105 Gruppo tubazioni S105 Leidinggroep S105 Conjunto de tubos S105	**Speicher** **ST151 - 951**

Pos	Bezeichnung description dénomination descrizioni benaming descripción	Bestell-Nr. Ordering no. Numero de commande n° d'ordine Bestelnummer Número el ordenar	ST151 - 951																Bemerkungen Remarks Remarques Osservazioni Opmerkingen Observaciones
1	Dichtung D24x30,5x2 AFM34 (10x)	7 747 016 507	■																
2	Verlängerung G1"x 80mm	67900919	■																
3	Rückschlagventil Eckform G1-1 1/2"	67900918	■																
4	Dichtung D28x44x2 EPDM (5x)	63010122	■																
5	Pumpe RS25/6-3 180 9H universal	63002480	■																
5	Pumpe UPS25-60 180 9H universal	63002481	■																
6	Reduzierstück G1 1/2" x G1"	5681100	■																
7	Metallwellschlauch DN25 950mm	67903097	■																
8	Winkel G 1"	67900914	■																
9	Metallwellschlauch DN25 585mm	67901384	■																
10	Dichtungssatz S105 LT/ST	5909265	■																

Speicher
ST151 - 951

Rohrgruppe S105
Pipe assembly S105
Conduites de groupe S105
Gruppo tubazioni S105
Leidinggroep S105
Conjunto de tubos S105

5B

Übersetzungsliste / List of translations / Liste des traductions / Traduzione delle descrizioni / Vertalinglijst / Lista de traducciones

Pos	Description	Denomination	Descrizione	Benaming	Descripción
1A	**Element of construction**	**Groupe de construction**	**Gruppo di construzione**	**Montagegroep**	**Grupo de construccion**
2	Base cover ST 151-301	Plinthe ST 151-301	Zoccolo ST 151-301	Plint ST 151-301	Zócalo ST 151-301
4	Cylinder base ST,SE,SF,ST-D/F 151-301	PIED BALLON ST,SE,SF,ST-D/F 151-301	Foot pannello ST,SE,SF,ST-D/F 151-301	Mond-panel ST,SE,SF,ST-D/F 151-301	Pie panel ST,SE,SF,ST-D/F 151-301
6	O-ring 132x10mm	JOINT TORIQUE TRAPPE 132X10 ST151-951V2	Guarnizione circolare 132x10mm	O-ring 132x10mm	Junta para anodo 132x10mm
7	Thermal insulation D260 inspection port	ISOLATION TRAPPE D260*50	Isolamento Coperchio di pulizia D260	Isolatie Reinigingsdeksel D260	Aislamiento Tapa de limpieza D260
8	Cable channel bottom ST151-951	PASSE CABLE BAS ST151-951	Canale passacavi "SE" (nero)	Kabelgoot zwart Onder ST151-951	Canaleta negro debajo ST151-951
9	Sheet screw C St4,2x13 A3T (10x)	Vis à tôle C St4,2x13 A3T (10x)	Vite autofilettante pz C 4,2x13 A3T 10x	Plaatschroef C St4,2x13 A3T (10x)	Tornillo para chapa C St4,2x13 A3T (10x)
10	Badge (TBS-ISOCAL)	LOGO (TBS-ISOCAL)	Targhetta caldaia (TBS-ISOCAL)	Toestelplaat (TBS-ISOCAL)	Placa del aparato (TBS-ISOCAL)
11	Thermometer 30 - 80 degree C for	Thermometre 30-80ºc pour LT	Termometro 30-80 gradi C ST/L/LT	Thermometer 30-80 graden C ST/L/LT	Termómetro analogico horizontal L/LT 135
12	Cable channel top for DHW cylinder ST151	PASSE CABLE HAUT ST151/301	Canale passacavi sopra ST 151	Kabelgoot boven ST 151	Canaleta arriba ST 151
13	Thermal insulation element for contact	ISOL SONDE	Protezione termica per sonda a contatto	Isolatie Klemsensor	Aislamiento Sonda de contacto
15	Washer DIN9021 A6,4 A3K	RONDELLE DIN9021 A 6,4 A3K	Disco DIN9021 A6,4 A3K	Ring DIN9021 A6,4 A3K	Arandela DIN9021 A6,4 A3K
16	Holder for contact sensor	ETRIER DE FIXATION BALLON ST	Supporto per sonda a contatto	Houder Klemsensor	Sujeción Sonda de contacto
17	Spring tension strip for holder	Barette de tension	Morsetto a molla	Veerklem	Abrazadera de resorte
18	Casing lid SU/ST/SM 300	CAPOT ST/STD/STF/SF/SE/SU/SM 300	Coperchio SU/ST/SM 300	Deksel SU/ST/SM 300	Carcasa superior SU/ST/SM 300
20	Attachment part kit ST151-951	MAT MON ST 151/201/301	Set di fissaggio ST151-951	Bevestigingsset ST151-951	Juego piezas de fijacion ST151-951
1B	**Element of construction**	**Groupe de construction**	**Gruppo di construzione**	**Montagegroep**	**Grupo de construccion**
1	DHW cylinder ST301 D/F assembly.	Ballon ECS ST301 D/F mont.	Bollitore ST301 D/F	Boiler ST301 D/F	Acumulador ST301 D/F
2	Base cover ST 151-301	Plinthe ST 151-301	Zoccolo ST 151-301	Plint ST 151-301	Zócalo ST 151-301
4	Cylinder base ST,SE,SF,ST-D/F 151-301	PIED BALLON ST,SE,SF,ST-D/F 151-301	Foot pannello ST,SE,SF,ST-D/F 151-301	Mond-panel ST,SE,SF,ST-D/F 151-301	Pie panel ST,SE,SF,ST-D/F 151-301
6	O-ring 132x10mm	JOINT TORIQUE TRAPPE 132X10 ST151-951V2	Guarnizione circolare 132x10mm	O-ring 132x10mm	Junta para anodo 132x10mm
7	Thermal insulation D260 inspection port	ISOLATION TRAPPE D260*50	Isolamento Coperchio di pulizia D260	Isolatie Reinigingsdeksel D260	Aislamiento Tapa de limpieza D260
8	Cable channel bottom ST151-951	PASSE CABLE BAS ST151-951	Canale passacavi "SE" (nero)	Kabelgoot zwart Onder ST151-951	Canaleta negro debajo ST151-951
9	Sheet screw C St4,2x13 A3T (10x)	Vis à tôle C St4,2x13 A3T (10x)	Vite autofilettante pz C 4,2x13 A3T 10x	Plaatschroef C St4,2x13 A3T (10x)	Tornillo para chapa C St4,2x13 A3T (10x)
10	Badge (TBS-ISOCAL)	LOGO (TBS-ISOCAL)	Targhetta caldaia (TBS-ISOCAL)	Toestelplaat (TBS-ISOCAL)	Placa del aparato (TBS-ISOCAL)
11	Thermometer 30 - 80 degree C for	Thermometre 30-80ºc pour LT	Termometro 30-80 gradi C ST/L/LT	Thermometer 30-80 graden C ST/L/LT	Termómetro analogico horizontal L/LT 135
12	Cable channel top for DHW cylinder ST151	PASSE CABLE HAUT ST151/301	Canale passacavi sopra ST 151	Kabelgoot boven ST 151	Canaleta arriba ST 151
13	Thermal insulation element for contact	ISOL SONDE	Protezione termica per sonda a contatto	Isolatie Klemsensor	Aislamiento Sonda de contacto
14	Casing lid SU/ST/SM 300	CAPOT ST/STD/STF/SF/SE/SU/SM 300	Coperchio SU/ST/SM 300	Deksel SU/ST/SM 300	Carcasa superior SU/ST/SM 300
16	Attachment part kit ST151-951	MAT MON ST 151/201/301	Set di fissaggio ST151-951	Bevestigingsset ST151-951	Juego piezas de fijacion ST151-951
1C	**Element of construction**	**Groupe de construction**	**Gruppo di construzione**	**Montagegroep**	**Grupo de construccion**
2	Base cover ST 151-301	Plinthe ST 151-301	Zoccolo ST 151-301	Plint ST 151-301	Zócalo ST 151-301
4	Cylinder base ST,SE,SF,ST-D/F 151-301	PIED BALLON ST,SE,SF,ST-D/F 151-301	Foot pannello ST,SE,SF,ST-D/F 151-301	Mond-panel ST,SE,SF,ST-D/F 151-301	Pie panel ST,SE,SF,ST-D/F 151-301
6	O-ring 132x10mm	JOINT TORIQUE TRAPPE 132X10 ST151-951V2	Guarnizione circolare 132x10mm	O-ring 132x10mm	Junta para anodo 132x10mm
7	Thermal insulation D260 inspection port	ISOLATION TRAPPE D260*50	Isolamento Coperchio di pulizia D260	Isolatie Reinigingsdeksel D260	Aislamiento Tapa de limpieza D260
8	Cable channel bottom ST151-951	PASSE CABLE BAS ST151-951	Canale passacavi "SE" (nero)	Kabelgoot zwart Onder ST151-951	Canaleta negro debajo ST151-951
9	Sheet screw C St4,2x13 A3T (10x)	Vis à tôle C St4,2x13 A3T (10x)	Vite autofilettante pz C 4,2x13 A3T 10x	Plaatschroef C St4,2x13 A3T (10x)	Tornillo para chapa C St4,2x13 A3T (10x)
10	Badge (TBS-ISOCAL)	LOGO (TBS-ISOCAL)	Targhetta caldaia (TBS-ISOCAL)	Toestelplaat (TBS-ISOCAL)	Placa del aparato (TBS-ISOCAL)
11	Thermometer 30 - 80 degree C for	Thermometre 30-80ºc pour LT	Termometro 30-80 gradi C ST/L/LT	Thermometer 30-80 graden C ST/L/LT	Termómetro analogico horizontal L/LT 135
12	Cable channel top for DHW cylinder ST201	Chemin de câble haut pour ballon mod.201	Canale passacavi sopra ST 201	Kabelgoot boven ST 201	Canaleta arriba ST 201
13	Thermal insulation element for contact	ISOL SONDE	Protezione termica per sonda a contatto	Isolatie Klemsensor	Aislamiento Sonda de contacto
15	Washer DIN9021 A6,4 A3K	RONDELLE DIN9021 A 6,4 A3K	Disco DIN9021 A6,4 A3K	Ring DIN9021 A6,4 A3K	Arandela DIN9021 A6,4 A3K
16	Holder for contact sensor	ETRIER DE FIXATION BALLON ST	Supporto per sonda a contatto	Houder Klemsensor	Sujeción Sonda de contacto
17	Spring tension strip for holder	Barette de tension	Morsetto a molla	Veerklem	Abrazadera de resorte
18	Casing lid SU/ST/SM 300	CAPOT ST/STD/STF/SF/SE/SU/SM 300	Coperchio SU/ST/SM 300	Deksel SU/ST/SM 300	Carcasa superior SU/ST/SM 300
20	Attachment part kit ST151-951	MAT MON ST 151/201/301	Set di fissaggio ST151-951	Bevestigingsset ST151-951	Juego piezas de fijacion ST151-951
1D	**Element of construction**	**Groupe de construction**	**Gruppo di construzione**	**Montagegroep**	**Grupo de construccion**
2	Base cover for DHW cylinder size 401	Plinthe pour préparateur mod.401	COPRIZOCCOLO TBS 401 - RC	Plint ST 401	Zócalo ST 401
4	Washer DIN125-A13-A3K	Rondelle DIN125-A13-A3K	Disco DIN125-A13-A3K	Ring DIN125-A13-A3K	Placa DIN125-A13-A3K
5	Cylinder bases (3 pieces)	PIED BALLON ST401,551,751,951 (3x)	Montaggio piedi ST 401/551/751/951 (3x)	Montage voeten ST 401/551/751/951 (3x)	Montaje de los pies ST 401/551/751/951
7	O-ring 132x10mm	JOINT TORIQUE TRAPPE 132X10 ST151-951V2	Guarnizione circolare 132x10mm	O-ring 132x10mm	Junta para anodo 132x10mm
9	Washer DIN9021 A6,4 A3K	RONDELLE DIN9021 A 6,4 A3K	Disco DIN9021 A6,4 A3K	Ring DIN9021 A6,4 A3K	Arandela DIN9021 A6,4 A3K
10	Holder for contact sensor	ETRIER DE FIXATION BALLON ST	Supporto per sonda a contatto	Houder Klemsensor	Sujeción Sonda de contacto
11	Spring tension strip for holder	Barette de tension	Morsetto a molla	Veerklem	Abrazadera de resorte
12	Attachment part kit ST151-951	MAT MON ST 151/201/301	Set di fissaggio ST151-951	Bevestigingsset ST151-951	Juego piezas de fijacion ST151-951
1E	**Element of construction**	**Groupe de construction**	**Gruppo di construzione**	**Montagegroep**	**Grupo de construccion**
1	DHW cylinder ST 401 D/F assembly.	Ballon ECS ST401 D/F mont.	Bollitore ST401 D/F	Boiler ST401 D/F	Acumulador ST401 D/F

Übersetzungsliste
List of translations

Liste des traductions
Traduzione delle descrizioni

Vertalinglijst
Lista de traducciones

Pos	Description	Denomination	Descrizione	Benaming	Descripción
2	Base cover for DHW cylinder size 401	Plinthe pour préparateur mod.401	COPRIZOCCOLO TBS 401 - RC	Plint ST 401	Zócalo ST 401
3	Hex nut ISO4032 M12 8 A3K	Ecrou 6 pans ISO4032 M12 8 A3K	Dado a testa esagonale ISO4032 M12 8 A3K	Zeskantmoer ISO4032 M12 8 A3K	Tuerca exagonal ISO4032 M12 8 A3K
4	Washer DIN125-A13-A3K	Rondelle DIN125-A13-A3K	Disco DIN125-A13-A3K	Ring DIN125-A13-A3K	Placa DIN125-A13-A3K
5	Cylinder bases (3 pieces)	PIED BALLON ST401,551,751,951 (3x)	Montaggio piedi ST 401/551/751/951 (3x)	Montage voeten ST 401/551/751/951 (3x)	Montaje de los pies ST 401/551/751/951
7	O-ring 132x10mm	JOINT TORIQUE TRAPPE 132X10 ST151-951V2	Guarnizione circolare 132x10mm	O-ring 132x10mm	Junta para anodo 132x10mm
8	Attachment part kit ST151-951	MAT MON ST 151/201/301	Set di fissaggio ST151-951	Bevestigingsset ST151-951	Juego piezas de fijacion ST151-951
1F	**Element of construction**	**Groupe de construction**	**Gruppo di construzione**	**Montagegroep**	**Grupo de construccion**
2	Base cover for DHW cylinder size 401	Plinthe pour préparateur mod.401	COPRIZOCCOLO TBS 401 - RC	Plint ST 401	Zócalo ST 401
3	Hex nut ISO4032 M12 8 A3K	Ecrou 6 pans ISO4032 M12 8 A3K	Dado a testa esagonale ISO4032 M12 8 A3K	Zeskantmoer ISO4032 M12 8 A3K	Tuerca exagonal ISO4032 M12 8 A3K
4	Washer DIN125-A13-A3K	Rondelle DIN125-A13-A3K	Disco DIN125-A13-A3K	Ring DIN125-A13-A3K	Placa DIN125-A13-A3K
5	Cylinder bases (3 pieces)	PIED BALLON ST401,551,751,951 (3x)	Montaggio piedi ST 401/551/751/951 (3x)	Montage voeten ST 401/551/751/951 (3x)	Montaje de los pies ST 401/551/751/951
7	O-ring 132x10mm	JOINT TORIQUE TRAPPE 132X10 ST151-951V2	Guarnizione circolare 132x10mm	O-ring 132x10mm	Junta para anodo 132x10mm
9	Washer DIN9021 A6,4 A3K	RONDELLE DIN9021 A 6,4 A3K	Disco DIN9021 A6,4 A3K	Ring DIN9021 A6,4 A3K	Arandela DIN9021 A6,4 A3K
10	Holder for contact sensor	ETRIER DE FIXATION BALLON ST	Supporto per sonda a contatto	Houder Klemsensor	Sujeción Sonda de contacto
11	Spring tension strip for holder	Barette de tension	Morsetto a molla	Veerklem	Abrazadera de resorte
12	Attachment part kit ST151-951	MAT MON ST 151/201/301	Set di fissaggio ST151-951	Bevestigingsset ST151-951	Juego piezas de fijacion ST151-951
2	**Element of construction**	**Groupe de construction**	**Gruppo di construzione**	**Montagegroep**	**Grupo de construccion**
1	Anode D33x400mm	ANODE MAGNES 33X400 MM V2	Anodo D33x400mm	Anode D33x400mm	Anodo de magnesio completo 33x400mm
2	Chains anode 3sect cpl	ANODE 3 ELTS 558/528mm M8 CPL	Anodo a catena 3 El. 558/528 mm M8	Kettinganode 3 elementen	Cadena de ánodos 3 elementos
3	Mounting kit magnesium anodes (10 pc)	Fixation pour anode (10 pces)	Set di fissaggio anodi di magnesio (10x)	Bevestigingsset magnesiumanoden (10x)	Set de Fijación del Anodo (10x)
6	Washer DIN125 A3K (10x)	Rondelle plate DIN125 A3K (10x)	Rondella DIN125 A3K (10x)	Onderlegring DIN125 A3K (10x)	Arandela DIN125 A3K (10x)
8	Hex nut ISO4032 M8 8 A3K	Ecrou 6 pans ISO4032 M8 8 A3K	Dado esagonale ISO4032 M8 8 A3K	Zeskantmoer ISO4032 M8 8 A3K	Tuerca 6KT ISO4032 M8 8 A3k
9	Screw ISO4017 M10x30 A3K (10X)	VIS ISO 4017 M10x30 A3K (10x)	Vite Iso 4017 M10x30 A3K (10x)	Schroef Iso 4017 M10x30 A3K (10x)	Tornillo Iso 4017 M10x30 A3K (10x)
10	Washer DIN125-st 10,5x2,0mm	RONDELLE 10X20 10,5x2,0mm	Rondella DIN125-st 10,5x2,0mm	Onderlegring DIN125-st 10,5x2,0mm	Arandela DIN125-st 10,5x2,0mm
11	Flue gas for magnesium anode	PRISE DE MASSE ANODE	Controllo per anodo di magnesio	Bewaking voor magnesiumanode	Cable Anodo Magnesio Con Comprobador
14	Sensor well R3/4"x100mm	DOIGT DE GANT 3/4x 100mm	Pozzetto ad immersione R3/4"x100mm	Dompelhuls R3/4"x100mm	Vaina 3/4" x 100 mm
15	Manhole cover D210mm 10,8	Trappe visitest D210mm 10,8	Coperchio d'ispezione D210 mm 10,8	Deksel handgat D210mm 10,8	Brida registro D210 acumulador S115UT
16	Inert anode UP 400mm	Anode inerte UP400 avec branch	Anode inerte UP400	Inertanode UP 400mm	Anodo inerte Correx UP 10-19-H7
17	Inert anode 400mm with Threaded stud M8	Anode inerte 400mm avec Tige filetée M8	Anodo inerte con Perno filettato M8	Inertanode 400mm met Draadstift M8	Anodo inerte con Tornillo de sujeción M8
18	Mounting kit inert anodes (5 pack)	Fixation Anode Inerte (5x)	Materiale per il Montaggio Anodo (5x)	Montagemateriaal Inertanode (5x)	Material de Montaje Anodo inerte (5x)
21	Connecting cable 3500mm long with	Cable de raccordement 3500mm avec	Cavo di collegamento 3500mm	Aansluitkabel 3500mm	Cable conexión 3500mm
22	Connector potentiostat UP 19H AMP plug	Potentiostat à connecteur UP 19H	Potenziostato connettore UP 19H	Potentiostaat UP 19H	Potenciostato de enchufe UP 19H
23	Manhole cover emailliert socket 3/4"	Trappe de visite Manchon 3/4"	Coperchio d'ispezione Manicotto 3/4"	Handgatdeksel Mof 3/4"	Tapa de la boca de hombre Manguito 3/4"
24	Lifting hook	POIGNEE TRANSPORT BALLON TT150-200	Trasporto staffa	Transport beugel	Transporte soporte
27	Sensor well R 3/4"x190mm	Doigt de gant R 3/4"x190mm	Pozzetto ad immersione R 3/4"x190mm	Dompelhuls R 3/4"x190mm	Vaina de inmersión R 3/4"x190mm
28	Manhole cover D210mm (dummy)	Couvercle 8 trous pour s160	Coperchio d'ispezione D 210 mm (cieco)	Deksel handgat D210mm (blind)	Brida de registro D210mm SU 1000
29	Electro-heating insert 2kW 1x2kW	RESIST ELEC 2KW (1x2kW)	Resistenza elettrica 2KW (1x2kW)	Elektroverwarming 2KW (1x2kW)	Calefacción eléctrica 2KW (1x2kW)
30	Electro-heating insert 6kW 3x2kW	RESIST ELEC ST 201 6KW (3x2kW)	Resistenza elettrica 6KW (3x2kW)	Elektroverwarming 6KW (3x2kW)	Resistencia 6 kw 380V (3x2kW)
31	Connector part ST18/7 silver-plated	CONNECT ST18/7 ARGENTE	Connessione a spina ST18/7 argentata	Stekkerdeel ST18/7 verzilverd	Clavija ST18/7 plateada
3A	**Element of construction**	**Groupe de construction**	**Gruppo di construzione**	**Montagegroep**	**Grupo de construccion**
1	Tightening strap top ST 401 D810	CERCLAGE SUPERIEUR ST 401 D810	FASCETTA SUP. BOLL 401	Fixeerband boven ST 401 D810	Cinta de tensión arriba ST 401 D810
2	Cover ST401	Couvercle ST401	Copertura ST401/402 in alto	Afdekking ST401	Recubrimiento ST401
3	Collar for R 3/8"x60mm	Rozet R 3/8"x60mm	Rosetta D 60mm (R3/8") ST401-951	Rozet R 3/8"x60mm	Rosetón R 3/8"x60mm
4	Segment R.h. ST 401	Segment droit ST 401	Protezione termica Segmento ST401/402 dx	Isolatie rechts ST 401	Aislamiento derecha ST 401
5	Washer D680mm	Rondelle D680mm	Disco termoisolante D 680x80 mm	Onderlegring 680x80mm	Arandela 680x80mm
6	Washer 350x80mm	Rondelle 350x80mm	Disco termoisolante D 350x80 mm	Isolatie 350x80mm	Aislamiento 350x80mm
7	Tightening strap bottom ST 401 D810mm	Sangle inférieur ST 401 D810mm	Nastro tensore ST 401 D810mm	Fixeerband ST 401 D810mm	Cinta de tensión ST 401 D810mm
8	Retaining spring control panel	Ressort de maintien unité fonctionnelle	Molla di fissaggio Pannello di comando	Borgveer	Clip de fijación Panel de interruptores
9	Cable channel bottom ST151-951	PASSE CABLE BAS ST151-951	Canale passacavi "SE" (nero)	Kabelgoot zwart Onder ST151-951	Canaleta negro debajo ST151-951
10	Sheet screw C St4,2x13 A3T (10x)	Vis à tôle C St4,2x13 A3T (10x)	Vite autofilettante pz C 4,2x13 A3T 10x	Plaatschroef C St4,2x13 A3T (10x)	Tornillo para chapa C St4,2x13 A3T (10x)
11	Badge (TBS-ISOCAL)	LOGO (TBS-ISOCAL)	Targhetta caldaia (TBS-ISOCAL)	Toestelplaat (TBS-ISOCAL)	Placa del aparato (TBS-ISOCAL)
12	Thermometer 30 - 80 degree C for	Thermometre 30-80ºc pour LT	Termometro 30-80 gradi C ST/L/LT	Thermometer 30-80 graden C ST/L/LT	Termómetro analogico horizontal L/LT 135
13	Cable channel top ST 401	Chemin de câble haut ST 401	Canale passacavi sopra ST 401	Kabelgoot boven ST 401	Canaleta arriba ST 401
14	Thermal insulation element for contact	ISOL SONDE	Protezione termica per sonda a contatto	Isolatie Klemsensor	Aislamiento Sonda de contacto
15	Segment L.h. ST 401	Segment gauche ST 401	Protezione termica Segmento ST401/402 sx	Isolatie Links ST 401	Aislamiento izquierda ST 401
16	Collar for R 1 1/4"x120mm	Rozet pour R1 1/4"x120mm	Rosetta D 120mm (R1 1/4") ST401-951	Rozet R 1 1/4" x D 120mm	Rosetón R 1 1/4" x D 120mm
17	Collar for R 3/4"x120mm	Rozet pour R 3/4"x120mm	Rosetta D 120mm (R3/4") ST401-951	Rozet R 3/4" x D120mm	Rosetón R 3/4" x D120mm

Übersetzungsliste
List of translations

Liste des traductions
Traduzione delle descrizioni

Vertalinglijst
Lista de traducciones

Pos	Description	Denomination	Descrizione	Benaming	Descripción
18	Filling piece D70mmx70mm	Bouchon D70mmx70mm	Raccordo di carico D70x70 mm ST401-951	Vulstuk D70x70mm	Porción de llenado D70x70mm
19	Collar D120mm	Rozet diam 120mm	Rosetta D 120mm	Rozet D120mm	Rosetón D120mm
	Repair kit 148x210mm	Lot de répar.148x210mm	Set di riparazione 148x210 mm	Reparatie Kit 148x210mm	Set de reparación 148x210mm
	Repair kit 210x297mm	Lot de répar.210x297mm	Set di riparazione 210x297 mm	Reparatie Kit 210x297mm	Kit de reparación 210x297mm
3B	**Element of construction**	**Groupe de construction**	**Gruppo di construzione**	**Montagegroep**	**Grupo de construccion**
1	Tightening strap top ST 551/751 L D 1000	Sangle supérieur ST 551/751 L D 1000	Nastro tensore sopra ST 551/751 L D 1000	Fixeerband boven ST 551/751 L D 1000	Cinta de tensión arriba ST 551/751
2	Cover R.h. D1000mm ST551/751	Couvercle droit D1000mm ST551/751	Copertura tetto destra D1000mm ST551/751	Afdekking rechts D1000mm ST551/751	Recubrimiento derecha D1000mm ST551/751
3	Collar for R 3/8"x60mm	Rozet R 3/8"x60mm	Rosetta D 60mm (R3/8") ST401-951	Rozet R 3/8"x60mm	Rosetón R 3/8"x60mm
4	Segment R.h. rear 3 ST 551	Segment droit arrière 3 ST 551	Isolamento 3 ST 551	Isolatie 3 ST 551	Aislamiento 3 ST 551
5	Segment R.h. front 2 ST 551	Segment droit avant 2 ST 551	Isolamento 2 ST 551	Isolatie 2 ST 551	Aislamiento 2 ST 551
6	Washer 830x80mm	Rondelle 830x80mm	Disco termoisolante D 830x80 mm	Isolatie 830x80mm	Aislamiento 830x80mm
7	Washer 350x80mm	Rondelle 350x80mm	Disco termoisolante D 350x80 mm	Isolatie 350x80mm	Aislamiento 350x80mm
8	Tightening strap bottom ST 551/751 L D	Sangle inférieur ST 551/751 L D 1000	Nastro tensore ST 551/751 L D 1000	Fixeerband ST 551/751 L D 1000	Cinta de tensión ST 551/751 L D 1000
9	Retaining spring control panel	Ressort de maintien unité fonctionnelle	Molla di fissaggio Pannello di comando	Borgveer	Clip de fijación Panel de interruptores
10	Thermal insulation element for contact	ISOL SONDE	Protezione termica per sonda a contatto	Isolatie Klemsensor	Aislamiento Sonda de contacto
11	Cable channel bottom ST151-951	PASSE CABLE BAS ST151-951	Canale passacavi "SE" (nero)	Kabelgoot zwart Onder ST151-951	Canaleta negro debajo ST151-951
12	Sheet screw C St4,2x13 A3T (10x)	Vis à tôle C St4,2x13 A3T (10x)	Vite autofilettante pz C 4,2x13 A3T 10x	Plaatschroef C St4,2x13 A3T (10x)	Tornillo para chapa C St4,2x13 A3T (10x)
13	Badge (TBS-ISOCAL)	LOGO (TBS-ISOCAL)	Targhetta caldaia (TBS-ISOCAL)	Toestelplaat (TBS-ISOCAL)	Placa del aparato (TBS-ISOCAL)
14	Thermometer 30 - 80 degree C for	Thermometre 30-80ºc pour LT	Termometro 30-80 gradi C ST/L/LT	Thermometer 30-80 graden C ST/L/LT	Termómetro analogico horizontal L/LT 135
15	Cable channel top ST 551	Chemin de câble haut ST 551	canale passacavi sopra ST 551	Kabelgoot boven ST 551	Canaleta arriba ST 551
16	Segment L.h. front	ISOL AVANT GAUCHE BALLON 4 ST551	Isolamento 4 ST 551	Isolatie 4 ST 551	Aislamiento 4 ST 551
17	Segment L.h. rear 1 ST 551	Segment gauche arrière 1 ST 551	Isolamento 1 ST 551	Isolatie 1 ST 551	Aislamiento 1 ST 551
18	Cover L.h. D1000mm ST551/751	Couvercle gauche D1000mm ST551/751	Copertura tetto sinistra ST551/751	Afdekking links D1000mm ST551/751	Recubrimiento izquierda ST551/75
19	Collar for R 1 1/4"x120mm	Rozet pour R1 1/4"x120mm	Rosetta D 120mm (R1 1/4") ST401-951	Rozet R 1 1/4" x D 120mm	Rosetón R 1 1/4" x D 120mm
20	Collar for R 3/4"x120mm	Rozet pour R 3/4"x120mm	Rosetta D 120mm (R3/4") ST401-951	Rozet R 3/4" x D120mm	Rosetón R 3/4" x D120mm
21	Filling piece D70mmx70mm	Bouchon D70mmx70mm	Raccordo di carico D70x70 mm ST401-951	Vulstuk D70x70mm	Porción de llenado D70x70mm
22	Collar D120mm	Rozet diam 120mm	Rosetta D 120mm	Rozet D120mm	Rosetón D120mm
	Repair kit 148x210mm	Lot de répar.148x210mm	Set di riparazione 148x210 mm	Reparatie Kit 148x210mm	Set de reparación 148x210mm
	Repair kit 210x297mm	Lot de répar.210x297mm	Set di riparazione 210x297 mm	Reparatie Kit 210x297mm	Kit de reparación 210x297mm
3C	**Element of construction**	**Groupe de construction**	**Gruppo di construzione**	**Montagegroep**	**Grupo de construccion**
1	Tightening strap top ST 551/751 L D 1000	Sangle supérieur ST 551/751 L D 1000	Nastro tensore sopra ST 551/751 L D 1000	Fixeerband boven ST 551/751 L D 1000	Cinta de tensión arriba ST 551/751
2	Cover R.h. D1000mm ST551/751	Couvercle droit D1000mm ST551/751	Copertura tetto destra D1000mm ST551/751	Afdekking rechts D1000mm ST551/751	Recubrimiento derecha D1000mm ST551/751
3	Collar for R 3/8"x60mm	Rozet R 3/8"x60mm	Rosetta D 60mm (R3/8") ST401-951	Rozet R 3/8"x60mm	Rosetón R 3/8"x60mm
4	Segment R.h. rear 2 ST 751	Segment droit arrière 2 ST 751	Isolamento 2 ST 751	Isolatie 2 ST 751	Aislamiento 2 ST 751
5	Segment R.h. front 3 ST 751	Segment droit avant 3 ST 751	Isolamento 3 ST 751	Isolatie 3 ST 751	Aislamiento 3 ST 751
6	Washer 830x80mm	Rondelle 830x80mm	Disco termoisolante D 830x80 mm	Isolatie 830x80mm	Aislamiento 830x80mm
7	Washer 350x80mm	Rondelle 350x80mm	Disco termoisolante D 350x80 mm	Isolatie 350x80mm	Aislamiento 350x80mm
8	Tightening strap bottom ST 551/751 L D	Sangle inférieur ST 551/751 L D 1000	Nastro tensore ST 551/751 L D 1000	Fixeerband ST 551/751 L D 1000	Cinta de tensión ST 551/751 L D 1000
9	Retaining spring control panel	Ressort de maintien unité fonctionnelle	Molla di fissaggio Pannello di comando	Borgveer	Clip de fijación Panel de interruptores
10	Thermal insulation element for contact	ISOL SONDE	Protezione termica per sonda a contatto	Isolatie Klemsensor	Aislamiento Sonda de contacto
11	Cable channel bottom ST151-951	PASSE CABLE BAS ST151-951	Canale passacavi "SE" (nero)	Kabelgoot zwart Onder ST151-951	Canaleta negro debajo ST151-951
12	Sheet screw C St4,2x13 A3T (10x)	Vis à tôle C St4,2x13 A3T (10x)	Vite autofilettante pz C 4,2x13 A3T 10x	Plaatschroef C St4,2x13 A3T (10x)	Tornillo para chapa C St4,2x13 A3T (10x)
13	Badge (TBS-ISOCAL)	LOGO (TBS-ISOCAL)	Targhetta caldaia (TBS-ISOCAL)	Toestelplaat (TBS-ISOCAL)	Placa del aparato (TBS-ISOCAL)
14	Thermometer 30 - 80 degree C for	Thermometre 30-80ºc pour LT	Termometro 30-80 gradi C ST/L/LT	Thermometer 30-80 graden C ST/L/LT	Termómetro analogico horizontal L/LT 135
15	Cable channel top ST 751/95	PASSE CABLE SUP ST751/951	Canale passacavi sopra ST 751/95	Kabelgoot boven ST 751/95	Canaleta arriba ST 751/95
16	Segment L.h. front 4 ST 751	Segment gauche avant 4 ST 751	Isolamento 4 ST 751	Isolatie 4 ST 751	Aislamiento 4 ST 751
17	Segment L.h. rear 1 ST 751	Sement gauche arrière 1 ST 751	Isolamento 1 ST 751	Isolatie 1 ST 751	Aislamiento 1 ST 751
18	Cover L.h. D1000mm ST551/751	Couvercle gauche D1000mm ST551/751	Copertura tetto sinistra ST551/751	Afdekking links D1000mm ST551/751	Recubrimiento izquierda ST551/75
19	Collar for R 1 1/4"x120mm	Rozet pour R1 1/4"x120mm	Rosetta D 120mm (R1 1/4") ST401-951	Rozet R 1 1/4" x D 120mm	Rosetón R 1 1/4" x D 120mm
20	Collar for R 3/4"x120mm	Rozet pour R 3/4"x120mm	Rosetta D 120mm (R3/4") ST401-951	Rozet R 3/4" x D120mm	Rosetón R 3/4" x D120mm
21	Filling piece D70mmx70mm	Bouchon D70mmx70mm	Raccordo di carico D70x70 mm ST401-951	Vulstuk D70x70mm	Porción de llenado D70x70mm
22	Collar D120mm	Rozet diam 120mm	Rosetta D 120mm	Rozet D120mm	Rosetón D120mm
	Repair kit 148x210mm	Lot de répar.148x210mm	Set di riparazione 148x210 mm	Reparatie Kit 148x210mm	Set de reparación 148x210mm
	Repair kit 210x297mm	Lot de répar.210x297mm	Set di riparazione 210x297 mm	Reparatie Kit 210x297mm	Kit de reparación 210x297mm
3D	**Element of construction**	**Groupe de construction**	**Gruppo di construzione**	**Montagegroep**	**Grupo de construccion**
1	Tightening strap top ST 951 L D1100	Sangle supérieur ST 951 L D1100	Nastro tensore sopra ST 951 L D1100	Fixeerband boven ST 951 L D1100	Cinta de tensión arriba ST 951 L D1100
2	Cover R.h. ST951	Couvercle droit ST951	Copertura tetto destra ST951	Afdekking rechts ST951	Recubrimiento derecha ST951

Übersetzungsliste
List of translations

Liste des traductions
Traduzione delle descrizioni

Vertalinglijst
Lista de traducciones

Pos	Description	Denomination	Descrizione	Benaming	Descripción
3	Collar for R 3/8"x60mm	Rozet R 3/8"x60mm	Rosetta D 60mm (R3/8") ST401-951	Rozet R 3/8"x60mm	Rosetón R 3/8"x60mm
4	Segment R.h. rear 2 ST 951	ISOL ARR DROITE 2 ST 951	Isolamento 2 ST 951	Isolatie 2 ST 951	Aislamiento 2 ST 951
5	Segment R.h. front 3 ST 951	Segment droit avant 3 ST 951	Isolamento 3 ST 951	Isolatie 3 ST 951	Aislamiento 3 ST 951
6	Washer 930x80mm	Rondelle 930x80mm	Disco termoisolante D 930x80 mm	Isolatie 930x80mm	Aislamiento 930x80mm
7	Washer 350x80mm	Rondelle 350x80mm	Disco termoisolante D 350x80 mm	Isolatie 350x80mm	Aislamiento 350x80mm
8	Tightening strap bottom ST 951 L D 1100	CERCLAGE INFERIEUR BALLON ST951 D1100	Nastro tensore ST 951 L D 1100	Fixeerband ST 951 L D 1100	Cinta de tensión ST 951 L D 1100
9	Retaining spring control panel	Ressort de maintien unité fonctionnelle	Molla di fissaggio Pannello di comando	Borgveer	Clip de fijación Panel de interruptores
10	Thermal insulation element for contact	ISOL SONDE	Protezione termica per sonda a contatto	Isolatie Klemsensor	Aislamiento Sonda de contacto
11	Cable channel bottom ST151-951	PASSE CABLE BAS ST151-951	Canale passacavi "SE" (nero)	Kabelgoot zwart Onder ST151-951	Canaleta negro debajo ST151-951
12	Sheet screw C St4,2x13 A3T (10x)	Vis à tôle C St4,2x13 A3T (10x)	Vite autofilettante pz C 4,2x13 A3T 10x	Plaatschroef C St4,2x13 A3T (10x)	Tornillo para chapa C St4,2x13 A3T (10x)
13	Badge (TBS-ISOCAL)	LOGO (TBS-ISOCAL)	Targhetta caldaia (TBS-ISOCAL)	Toestelplaat (TBS-ISOCAL)	Placa del aparato (TBS-ISOCAL)
14	Thermometer 30 - 80 degree C for	Thermometre 30-80ºc pour LT	Termometro 30-80 gradi C ST/L/LT	Thermometer 30-80 graden C ST/L/LT	Termómetro analogico horizontal L/LT 135
15	Cable channel top ST 751/95	PASSE CABLE SUP ST751/951	Canale passacavi sopra ST 751/95	Kabelgoot boven ST 751/95	Canaleta arriba ST 751/95
16	Segment L.h. front 4 ST 951	ISOL AVANT GAUCHE 4 ST 951	Isolamento 4 ST 951	Isolatie 4 ST 951	Aislamiento 4 ST 951
17	Segment L.h. rear 1 ST 951	HABIL BALLON 1 ST 951	Isolamento 1 ST 951	Isolatie 1 ST 951	Aislamiento 1 ST 951
18	Cover L.h. ST951 L	Couvercle gauche ST951 L	Copertura tetto sinistra ST951 L	Afdekking links ST951 L	recubrimiento izquierda ST951 L
19	Collar for R 1 1/2"x120mm	Rozet pour R1 1/2"x120mm	Rosetta R 1 1/2"xD120 mm	Rozet R 1 1/2"xD120 mm	Rosetón R 1 1/2"xD120 mm
20	Collar for R 3/4"x120mm	Rozet pour R 3/4"x120mm	Rosetta D 120mm (R3/4") ST401-951	Rozet R 3/4" x D120mm	Rosetón R 3/4" x D120mm
21	Collar for R 1 1/4"x120mm	Rozet pour R1 1/4"x120mm	Rosetta D 120mm (R1 1/4") ST401-951	Rozet R 1 1/4" x D 120mm	Rosetón R 1 1/4" x D 120mm
22	Filling piece D70mmx70mm	Bouchon D70mmx70mm	Raccordo di carico D70x70 mm ST401-951	Vulstuk D70x70mm	Porción de llenado D70x70mm
23	Collar D120mm	Rozet diam 120mm	Rosetta D 120mm	Rozet D120mm	Rosetón D120mm
	Repair kit 148x210mm	Lot de répar.148x210mm	Set di riparazione 148x210 mm	Reparatie Kit 148x210mm	Set de reparación 148x210mm
	Repair kit 210x297mm	Lot de répar.210x297mm	Set di riparazione 210x297 mm	Reparatie Kit 210x297mm	Kit de reparación 210x297mm
4A	**Element of construction**	**Groupe de construction**	**Gruppo di construzione**	**Montagegroep**	**Grupo de construccion**
1	Coupling DIN2950 Nr.270 1"	Manchon DIN2950 N° 270 1"	Manicotto DIN2950 N°270 1"	Mof DIN2950 N°270 1"	Manguito DIN2950 N°270 1"
2	Pipe nipple 1" 121mm long	Mouchon 1" 121mm	Nipplo doppio 1" 121mm	Nippel 1" 121mm	Manguito roscado doble 1" 121mm
3	Air vent valve 3/8" with key	PURGEUR 3/8"	Valvola automatica di sfiato 3/8"	Ontluchtingsventiel 3/8"	Válvula de purga de aire 3/8"
4	Angle non-return valve	TUBUL CLAPET ANTI THERMOSIPHON	Valvola di non ritorno+Rubinetto a sfera	Terugslagklep + Kogelkraan	Válvula de retención + Válvula de bola
5	Union nut G1 1/2"	ECROU RACCORD G 1 1/2"	Dado G1 1/2"	Wartelmoer G1 1/2"	Tuerca de racor G1 1/2"
6	Seal Set D32x44x2mm AFM34 (5 pc)	Kit d'étanchéité D32x44x2 AFM34 (5 pces	Set guarnizioni D32x44x2 AFM34 (5 pz.)	Afdichtingsset D32x44x2mm AFM34 (5 St)	Conjunto de juntas D32x44x2 AFM34 5 ud.
7	Pump WILO RS25/6-3 180mm 9h Universal	Pompe WILO RS25/6-3 180mm 9h Universal	Pompa WILO RS25/6-3 180mm 9h Universal	Pomp WILO RS25/6-3 180mm 9h Universal	Bomba WILO RS25/6-3 180mm 9h Universal
8	Part insert DIN2950 Nr.371 1"	Mamelon DIN2950 N° 371 1"	Inserto DIN2950 N°371 1"	Inlegstuk DIN2950 N°371 1"	Pieza de inserción DIN2950 N°371 1"
9	Tee DIN2950 Nr.130 1"x1"x1/2"	Pièce en T DIN2950 N° 121 1" 45°	Raccordo a T DIN2950 130 1"x1"x1/2"	T-Stuk DIN2950 130 1"x1"x1/2"	Pieza en T DIN2950 130 1"x1"x1/2"
10	Flex armoured hose DN25x800 1" with	TUBUL FLEXIBLE G 205T DN25 800mm R1"	Tubo flessibile DN25 800mm R1	Flexible slang DN25x800 1"	Tubo flexible DN25x800 1"
11	Angle DIN2950 Nr.90 1"	Coude DIN2950 N° 90 1"	Angolo DIN2950 N° 90 1"	Hoeksteun DIN2950 N° 90 1"	Ángulo DIN2950 N° 90 1"
14	Metal corrugated hose DN25 950mm long	Tuyau flexible métallique DN25 longueur	Tubo flessibile DN25x950mm R1"-R1"	Flexible slang DN25x950mm R1"-R1"	Tubo flexible DN25x950mm R1"-R1"
16	Elbow DIN2950 Nr.95 1"	Presse etoupe DIN2950 N° 95 1"	Raccordo filettato ad angolo N° 95 1" V	Haakse schroefverbinding DIN2950 N° 95 1	Racor angular DIN2950 N° 95 1" V
17	Gasket set 32x44x2mm (25pc)	Lot de joints 32x44x2mm (25x)	Set guarnizioni 32x44x2mm (25x)	Set afdichting 32x44x2mm (25x)	Conjunto de juntas 32x44x2mm (25x)
4B	**Element of construction**	**Groupe de construction**	**Gruppo di construzione**	**Montagegroep**	**Grupo de construccion**
1	Coupling DIN2950 Nr.270 1"	Manchon DIN2950 N° 270 1"	Manicotto DIN2950 N°270 1"	Mof DIN2950 N°270 1"	Manguito DIN2950 N°270 1"
2	Pipe nipple 1" 121mm long	Mouchon 1" 121mm	Nipplo doppio 1" 121mm	Nippel 1" 121mm	Manguito roscado doble 1" 121mm
3	Air vent valve 3/8" with key	PURGEUR 3/8"	Valvola automatica di sfiato 3/8"	Ontluchtingsventiel 3/8"	Válvula de purga de aire 3/8"
4	Angle non-return valve	TUBUL CLAPET ANTI THERMOSIPHON	Valvola di non ritorno+Rubinetto a sfera	Terugslagklep + Kogelkraan	Válvula de retención + Válvula de bola
5	Union nut G1 1/2"	ECROU RACCORD G 1 1/2"	Dado G1 1/2"	Wartelmoer G1 1/2"	Tuerca de racor G1 1/2"
6	Seal Set D32x44x2mm AFM34 (5 pc)	Kit d'étanchéité D32x44x2 AFM34 (5 pces	Set guarnizioni D32x44x2 AFM34 (5 pz.)	Afdichtingsset D32x44x2mm AFM34 (5 St)	Conjunto de juntas D32x44x2 AFM34 5 ud.
7	Pump WILO RS25/6-3 180mm 9h Universal	Pompe WILO RS25/6-3 180mm 9h Universal	Pompa WILO RS25/6-3 180mm 9h Universal	Pomp WILO RS25/6-3 180mm 9h Universal	Bomba WILO RS25/6-3 180mm 9h Universal
8	Part insert DIN2950 Nr.371 1"	Mamelon DIN2950 N° 371 1"	Inserto DIN2950 N°371 1"	Inlegstuk DIN2950 N°371 1"	Pieza de inserción DIN2950 N°371 1"
9	Tee DIN2950 Nr.130 1"x1"x1/2"	Pièce en T DIN2950 N° 121 1" 45°	Raccordo a T DIN2950 130 1"x1"x1/2"	T-Stuk DIN2950 130 1"x1"x1/2"	Pieza en T DIN2950 130 1"x1"x1/2"
10	Flex armoured hose DN25x800 1" with	TUBUL FLEXIBLE G 205T DN25 800mm R1"	Tubo flessibile DN25 800mm R1	Flexible slang DN25x800 1"	Tubo flexible DN25x800 1"
11	Angle DIN2950 Nr.90 1"	Coude DIN2950 N° 90 1"	Angolo DIN2950 N° 90 1"	Hoeksteun DIN2950 N° 90 1"	Ángulo DIN2950 N° 90 1"
12	Manifold T R1 1/4"	RACCORD FONTE 5/4" G205 T	Raccordo sagomato TR 5/4	Aansluitstuk T R1 1/4"	Pieza de conexió T R1 1/4"
13	Gasket D57x96x1.5mm	JOINT D57X96X1,5	GUARNIZIONE D57x96x1.5MM	Pakking D57x96x1,5mm	Junta D57x96x1,5mm
14	Metal corrugated hose DN25 950mm long	Tuyau flexible métallique DN25 longueur	Tubo flessibile DN25x950mm R1"-R1"	Flexible slang DN25x950mm R1"-R1"	Tubo flexible DN25x950mm R1"-R1"
15	Elbow DIN2950 Nr.95 1"	Presse etoupe DIN2950 N° 95 1"	Raccordo filettato ad angolo N° 95 1" V	Haakse schroefverbinding DIN2950 N° 95 1	Racor angular DIN2950 N° 95 1" V
16	Gasket set 32x44x2mm (25pc)	Lot de joints 32x44x2mm (25x)	Set guarnizioni 32x44x2mm (25x)	Set afdichting 32x44x2mm (25x)	Conjunto de juntas 32x44x2mm (25x)
4C	**Element of construction**	**Groupe de construction**	**Gruppo di construzione**	**Montagegroep**	**Grupo de construccion**
1	Coupling DIN2950 Nr.270 1"	Manchon DIN2950 N° 270 1"	Manicotto DIN2950 N°270 1"	Mof DIN2950 N°270 1"	Manguito DIN2950 N°270 1"

Übersetzungsliste
List of translations

Liste des traductions
Traduzione delle descrizioni

Vertalinglijst
Lista de traducciones

Pos	Description	Denomination	Descrizione	Benaming	Descripción
2	Pipe nipple 1" 121mm long	Mouchon 1" 121mm	Nipplo doppio 1" 121mm	Nippel 1" 121mm	Manguito roscado doble 1" 121mm
3	Air vent valve 3/8" with key	PURGEUR 3/8"	Valvola automatica di sfiato 3/8"	Ontluchtingsventiel 3/8"	Válvula de purga de aire 3/8"
4	Angle non-return valve	TUBUL CLAPET ANTI THERMOSIPHON	Valvola di non ritorno+Rubinetto a sfera	Terugslagklep + Kogelkraan	Válvula de retención + Válvula de bola
5	Union nut G1 1/2"	ECROU RACCORD G 1 1/2"	Dado G1 1/2"	Wartelmoer G1 1/2"	Tuerca de racor G1 1/2"
6	Seal Set D32x44x2mm AFM34 (5 pc)	Kit d'étanchéité D32x44x2 AFM34 (5 pces	Set guarnizioni D32x44x2 AFM34 (5 pz.)	Afdichtingsset D32x44x2mm AFM34 (5 St)	Conjunto de juntas D32x44x2 AFM34 5 ud.
7	Pump WILO RS25/6-3 180mm 9h Universal	Pompe WILO RS25/6-3 180mm 9h Universal	Pompa WILO RS25/6-3 180mm 9h Universal	Pomp WILO RS25/6-3 180mm 9h Universal	Bomba WILO RS25/6-3 180mm 9h Universal
8	Part insert DIN2950 Nr.371 1"	Mamelon DIN2950 N° 371 1"	Inserto DIN2950 N°371 1"	Inlegstuk DIN2950 N°371 1"	Pieza de inserción DIN2950 N°371 1"
9	Angle DIN2950 Nr.90 1"	Coude DIN2950 N° 90 1"	Angolo DIN2950 N° 90 1"	Hoeksteun DIN2950 N° 90 1"	Ángulo DIN2950 N° 90 1"
10	Metal corrugated hose DN25 950mm long	Tuyau flexible métallique DN25 longueur	Tubo flessibile DN25x950mm R1"-R1"	Flexible slang DN25x950mm R1"-R1"	Tubo flexible DN25x950mm R1"-R1"
11	Tee DIN2950 Nr.130 1"x1"x1/2"	Pièce en T DIN2950 N° 121 1" 45°	Raccordo a T DIN2950 130 1"x1"x1/2"	T-Stuk DIN2950 130 1"x1"x1/2"	Pieza en T DIN2950 130 1"x1"x1/2"
15	Flex armoured hose DN25x800 1" with	TUBUL FLEXIBLE G 205T DN25 800mm R1"	Tubo flessibile DN25 800mm R1	Flexible slang DN25x800 1"	Tubo flexible DN25x800 1"
16	Tee DIN2950 Nr.130 1"x1"x1/2"	Pièce en T DIN2950 N° 121 1" 45°	Raccordo a T DIN2950 130 1"x1"x1/2"	T-Stuk DIN2950 130 1"x1"x1/2"	Pieza en T DIN2950 130 1"x1"x1/2"
18	Tee DIN2950 Nr.130 1 1/2"x1"x1 1/2"	Pièce en T DIN2950 N°130 1 1/2"x1"x1 1/2	Raccordo a T N°130 1 1/2"x1"x1 1/2" V	T-Stuk DIN2950 N°130 1 1/2"x1"x1 1/2" V	Pieza en T DIN2950 N°130 1 1/2"x1"x1 1/2
19	Gasket set 32x44x2mm (25pc)	Lot de joints 32x44x2mm (25x)	Set guarnizioni 32x44x2mm (25x)	Set afdichting 32x44x2mm (25x)	Conjunto de juntas 32x44x2mm (25x)
4D	**Element of construction**	**Groupe de construction**	**Gruppo di construzione**	**Montagegroep**	**Grupo de construccion**
1	Coupling DIN2950 Nr.270 1"	Manchon DIN2950 N° 270 1"	Manicotto DIN2950 N°270 1"	Mof DIN2950 N°270 1"	Manguito DIN2950 N°270 1"
2	Pipe nipple 1" 121mm long	Mouchon 1" 121mm	Nipplo doppio 1" 121mm	Nippel 1" 121mm	Manguito roscado doble 1" 121mm
3	Air vent valve 3/8" with key	PURGEUR 3/8"	Valvola automatica di sfiato 3/8"	Ontluchtingsventiel 3/8"	Válvula de purga de aire 3/8"
4	Angle non-return valve	TUBUL CLAPET ANTI THERMOSIPHON	Valvola di non ritorno+Rubinetto a sfera	Terugslagklep + Kogelkraan	Válvula de retención + Válvula de bola
5	Union nut G1 1/2"	ECROU RACCORD G 1 1/2"	Dado G1 1/2"	Wartelmoer G1 1/2"	Tuerca de racor G1 1/2"
6	Seal Set D32x44x2mm AFM34 (5 pc)	Kit d'étanchéité D32x44x2 AFM34 (5 pces	Set guarnizioni D32x44x2 AFM34 (5 pz.)	Afdichtingsset D32x44x2mm AFM34 (5 St)	Conjunto de juntas D32x44x2 AFM34 5 ud.
7	Pump WILO RS25/6-3 180mm 9h Universal	Pompe WILO RS25/6-3 180mm 9h Universal	Pompa WILO RS25/6-3 180mm 9h Universal	Pomp WILO RS25/6-3 180mm 9h Universal	Bomba WILO RS25/6-3 180mm 9h Universal
8	Part insert DIN2950 Nr.371 1"	Mamelon DIN2950 N° 371 1"	Inserto DIN2950 N°371 1"	Inlegstuk DIN2950 N°371 1"	Pieza de inserción DIN2950 N°371 1"
9	Angle DIN2950 Nr.90 1"	Coude DIN2950 N° 90 1"	Angolo DIN2950 N° 90 1"	Hoeksteun DIN2950 N° 90 1"	Ángulo DIN2950 N° 90 1"
10	Metal corrugated hose DN25 950mm long	Tuyau flexible métallique DN25 longueur	Tubo flessibile DN25x950mm R1"-R1"	Flexible slang DN25x950mm R1"-R1"	Tubo flexible DN25x950mm R1"-R1"
11	Elbow DIN2950 Nr.95 1"	Presse etoupe DIN2950 N° 95 1"	Raccordo filettato ad angolo N° 95 1" V	Haakse schroefverbinding DIN2950 N° 95 1	Racor angular DIN2950 N° 95 1" V
12	Angle DIN2950 Nr.121 1" 45°	Coude DIN2950 N° 121 1" 45°	Angolo DIN2950 N°121 1"	Hoeksteun DIN2950 N°121 1"	Ángulo DIN2950 N°121 1"
14	Flex armoured hose DN25x800 1" with	TUBUL FLEXIBLE G 205T DN25 800mm R1"	Tubo flessibile DN25 800mm R1	Flexible slang DN25x800 1"	Tubo flexible DN25x800 1"
15	Screwed part DIN2950 Nr.376 1"	Raccord DIN2950 N° 376 1"	Pezzo di collegamento DIN2950 N°376 1"	Enschroefdeel DIN2950 N°376 1"	Pieza de unión DIN2950 N°376 1"
16	Tee DIN2950 Nr.130 1 1/2"x1"x1 1/2"	Pièce en T DIN2950 N°130 1 1/2"x1"x1 1/2	Raccordo a T N°130 1 1/2"x1"x1 1/2" V	T-Stuk DIN2950 N°130 1 1/2"x1"x1 1/2" V	Pieza en T DIN2950 N°130 1 1/2"x1"x1 1/2
18	Gasket set 32x44x2mm (25pc)	Lot de joints 32x44x2mm (25x)	Set guarnizioni 32x44x2mm (25x)	Set afdichting 32x44x2mm (25x)	Conjunto de juntas 32x44x2mm (25x)
4E	**Element of construction**	**Groupe de construction**	**Gruppo di construzione**	**Montagegroep**	**Grupo de construccion**
1	Extension DIN2950 Nr.526 1" 100mm long	Rallonge DIN2950 N°526 1" longueur	Prolunga DIN2950 N°526 1"x100mm	Verlenging DIN2950 N°526 1"x100mm	Prolongacion DIN2950 N°526 1"x100mm
2	Air vent valve 3/8" with key	PURGEUR 3/8"	Valvola automatica di sfiato 3/8"	Ontluchtingsventiel 3/8"	Válvula de purga de aire 3/8"
3	Angle non-return valve	TUBUL CLAPET ANTI THERMOSIPHON	Valvola di non ritorno+Rubinetto a sfera	Terugslagklep + Kogelkraan	Válvula de retención + Válvula de bola
4	Union nut G1 1/2"	ECROU RACCORD G 1 1/2"	Dado G1 1/2"	Wartelmoer G1 1/2"	Tuerca de racor G1 1/2"
5	Seal Set D32x44x2mm AFM34 (5 pc)	Kit d'étanchéité D32x44x2 AFM34 (5 pces	Set guarnizioni D32x44x2 AFM34 (5 pz.)	Afdichtingsset D32x44x2mm AFM34 (5 St)	Conjunto de juntas D32x44x2 AFM34 5 ud.
6	Pump WILO RS25/6-3 180mm 9h Universal	Pompe WILO RS25/6-3 180mm 9h Universal	Pompa WILO RS25/6-3 180mm 9h Universal	Pomp WILO RS25/6-3 180mm 9h Universal	Bomba WILO RS25/6-3 180mm 9h Universal
7	Part insert DIN2950 Nr.371 1"	Mamelon DIN2950 N° 371 1"	Inserto DIN2950 N°371 1"	Inlegstuk DIN2950 N°371 1"	Pieza de inserción DIN2950 N°371 1"
8	Angle DIN2950 Nr.90 1"	Coude DIN2950 N° 90 1"	Angolo DIN2950 N° 90 1"	Hoeksteun DIN2950 N° 90 1"	Ángulo DIN2950 N° 90 1"
9	Flex armoured hose DN25x800 1" with	TUBUL FLEXIBLE G 205T DN25 800mm R1"	Tubo flessibile DN25 800mm R1	Flexible slang DN25x800 1"	Tubo flexible DN25x800 1"
10	Elbow DIN2950 Nr.95 1"	Presse etoupe DIN2950 N° 95 1"	Raccordo filettato ad angolo N° 95 1" V	Haakse schroefverbinding DIN2950 N° 95 1	Racor angular DIN2950 N° 95 1" V
11	Gasket set 32x44x2mm (25pc)	Lot de joints 32x44x2mm (25x)	Set guarnizioni 32x44x2mm (25x)	Set afdichting 32x44x2mm (25x)	Conjunto de juntas 32x44x2mm (25x)
4F	**Element of construction**	**Groupe de construction**	**Gruppo di construzione**	**Montagegroep**	**Grupo de construccion**
1	Extension DIN2950 Nr.526 1" 100mm long	Rallonge DIN2950 N°526 1" longueur	Prolunga DIN2950 N°526 1"x100mm	Verlenging DIN2950 N°526 1"x100mm	Prolongacion DIN2950 N°526 1"x100mm
2	Air vent valve 3/8" with key	PURGEUR 3/8"	Valvola automatica di sfiato 3/8"	Ontluchtingsventiel 3/8"	Válvula de purga de aire 3/8"
3	Angle non-return valve	TUBUL CLAPET ANTI THERMOSIPHON	Valvola di non ritorno+Rubinetto a sfera	Terugslagklep + Kogelkraan	Válvula de retención + Válvula de bola
4	Union nut G1 1/2"	ECROU RACCORD G 1 1/2"	Dado G1 1/2"	Wartelmoer G1 1/2"	Tuerca de racor G1 1/2"
5	Seal Set D32x44x2mm AFM34 (5 pc)	Kit d'étanchéité D32x44x2 AFM34 (5 pces	Set guarnizioni D32x44x2 AFM34 (5 pz.)	Afdichtingsset D32x44x2mm AFM34 (5 St)	Conjunto de juntas D32x44x2 AFM34 5 ud.
6	Pump WILO RS25/6-3 180mm 9h Universal	Pompe WILO RS25/6-3 180mm 9h Universal	Pompa WILO RS25/6-3 180mm 9h Universal	Pomp WILO RS25/6-3 180mm 9h Universal	Bomba WILO RS25/6-3 180mm 9h Universal
7	Part insert DIN2950 Nr.371 1"	Mamelon DIN2950 N° 371 1"	Inserto DIN2950 N°371 1"	Inlegstuk DIN2950 N°371 1"	Pieza de inserción DIN2950 N°371 1"
8	Angle DIN2950 Nr.90 1"	Coude DIN2950 N° 90 1"	Angolo DIN2950 N° 90 1"	Hoeksteun DIN2950 N° 90 1"	Ángulo DIN2950 N° 90 1"
9	Metal corrugated hose DN25 950mm long	Tuyau flexible métallique DN25 longueur	Tubo flessibile DN25x950mm R1"-R1"	Flexible slang DN25x950mm R1"-R1"	Tubo flexible DN25x950mm R1"-R1"
11	Elbow DIN2950 Nr.95 1"	Presse etoupe DIN2950 N° 95 1"	Raccordo filettato ad angolo N° 95 1" V	Haakse schroefverbinding DIN2950 N° 95 1	Racor angular DIN2950 N° 95 1" V
12	Gasket set 32x44x2mm (25pc)	Lot de joints 32x44x2mm (25x)	Set guarnizioni 32x44x2mm (25x)	Set afdichting 32x44x2mm (25x)	Conjunto de juntas 32x44x2mm (25x)
4G	**Element of construction**	**Groupe de construction**	**Gruppo di construzione**	**Montagegroep**	**Grupo de construccion**
1	Extension DIN2950 Nr.526 1" 100mm long	Rallonge DIN2950 N°526 1" longueur	Prolunga DIN2950 N°526 1"x100mm	Verlenging DIN2950 N°526 1"x100mm	Prolongacion DIN2950 N°526 1"x100mm

Übersetzungsliste
List of translations

Liste des traductions
Traduzione delle descrizioni

Vertalinglijst
Lista de traducciones

Pos	Description	Denomination	Descrizione	Benaming	Descripción
2	Air vent valve 3/8" with key	PURGEUR 3/8"	Valvola automatica di sfiato 3/8"	Ontluchtingsventiel 3/8"	Válvula de purga de aire 3/8"
3	Angle non-return valve	TUBUL CLAPET ANTI THERMOSIPHON	Valvola di non ritorno+Rubinetto a sfera	Terugslagklep + Kogelkraan	Válvula de retención + Válvula de bola
4	Union nut G1 1/2"	ECROU RACCORD G 1 1/2"	Dado G1 1/2"	Wartelmoer G1 1/2"	Tuerca de racor G1 1/2"
5	Seal Set D32x44x2mm AFM34 (5 pc)	Kit d'étanchéité D32x44x2 AFM34 (5 pces	Set guarnizioni D32x44x2 AFM34 (5 pz.)	Afdichtingsset D32x44x2mm AFM34 (5 St)	Conjunto de juntas D32x44x2 AFM34 5 ud.
6	Pump WILO RS25/6-3 180mm 9h Universal	Pompe WILO RS25/6-3 180mm 9h Universal	Pompa WILO RS25/6-3 180mm 9h Universal	Pomp WILO RS25/6-3 180mm 9h Universal	Bomba WILO RS25/6-3 180mm 9h Universal
7	Part insert DIN2950 Nr.371 1"	Mamelon DIN2950 N° 371 1"	Inserto DIN2950 N°371 1"	Inlegstuk DIN2950 N°371 1"	Pieza de inserción DIN2950 N°371 1"
8	Angle DIN2950 Nr.90 1"	Coude DIN2950 N° 90 1"	Angolo DIN2950 N° 90 1"	Hoeksteun DIN2950 N° 90 1"	Ángulo DIN2950 N° 90 1"
9	Metal corrugated hose DN25 950mm long	Tuyau flexible métallique DN25 longueur	Tubo flessibile DN25x950mm R1"-R1"	Flexible slang DN25x950mm R1"-R1"	Tubo flexible DN25x950mm R1"-R1"
10	Angle DIN2950 Nr.90 1"	Coude DIN2950 N° 90 1"	Angolo DIN2950 N° 90 1"	Hoeksteun DIN2950 N° 90 1"	Ángulo DIN2950 N° 90 1"
11	Elbow DIN2950 Nr.95 1"	Presse etoupe DIN2950 N° 95 1"	Raccordo filettato ad angolo N° 95 1" V	Haakse schroefverbinding DIN2950 N° 95 1	Racor angular DIN2950 N° 95 1" V
12	Gasket set 32x44x2mm (25pc)	Lot de joints 32x44x2mm (25x)	Set guarnizioni 32x44x2mm (25x)	Set afdichting 32x44x2mm (25x)	Conjunto de juntas 32x44x2mm (25x)
4H	**Element of construction**	**Groupe de construction**	**Gruppo di construzione**	**Montagegroep**	**Grupo de construccion**
1	Gasket D24x30.5x2mm AFM34 (10pc)	JOINT D24x30,5x2 AFM34 (10x)	Guarnizione D24x30,5x2 AFM34 (10x)	Afdichting D24x30,5x2 AFM34 (10x)	Junta D24x30,5x2 AFM34 (10x)
2	Extension G1"x 80mm	TUBUL RALLONGE G1"x 80mm	Prolunga G1"x80mm	Verlenging G1"x80mm	Prolongacion G1"x80mm
3	Non-return valve G1"-1 1/2"	TUBUL CLAPET ANTI RETOUR G1" - 1 1/2"	Valvola di non ritorno G1"-1 1/2"	Terugslagklep G1"-1 1/2"	Valvula antiretorno G1" - 1 1/2"
4	Gasket D28x44x2mm, black (5 pc in kit)	Joint D28x44x2mm, noir (5x)	Guarnizione D28x44x2mm, nero (5x)	Pakking D28x44x2mm , zwart (5x)	Junta D28x44x2mm, negro (5x)
5	Pump WILO RS25/6-3 180mm 9h Universal	Pompe WILO RS25/6-3 180mm 9h Universal	Pompa WILO RS25/6-3 180mm 9h Universal	Pomp WILO RS25/6-3 180mm 9h Universal	Bomba WILO RS25/6-3 180mm 9h Universal
6	Reducing piece G 1 1/2"-1"	Reduction G1 1/2"-1	Riduzione G 1 1/2"-1"	Verloopnippel G 1 1/2"-1"	Pieza de Reducción G 1 1/2"-1" LT135-200
7	Metal corrugated hose DN25 800mm	Tubul coude DN25 L800	Tubo metallico ondulato DN25 800mm	Metalen flexibel DN25 800mm	Manguera ondulada de metal DN25 800mm
8	Double nipple G1xG1 89 long	RALLONGE 1" LG 89 MM V2	Nipples doppio G1"xG1" 89mm	Nippel G1"xG1" 89mm	Manguito roscado doble G1"xG1" 89mm
9	O-Ring Set 35x3 Set (5 Pice)	Joint torique 35x3 kit de (5 pièces)	Set O-ring 35x3 set (5 pz.)	O-Ring set 35x3 set (5 st)	Juego juntas tóricas 35x3 juego 5 piezas
10	Double nipple G1xG1 89 long	RALLONGE 1" LG 89 MM V2	Nipples doppio G1"xG1" 89mm	Nippel G1"xG1" 89mm	Manguito roscado doble G1"xG1" 89mm
11	Angle G1"	Tubul coude G1	Angolo G1"	Hoeksteun G1"	Angulo G1" compl. LT135-200/1
12	Metal corrugated hose DN25 635mm long	Tuyau flexible métallique DN25 635mm	Tubo metallico ondulato DN25 635mm	Metalen flexibel DN25 635mm	Manguera ondulada de metal DN25 635mm
13	Gasket set boiler storage pipework LT/ST	JOINTS G 115 LT/ST	Guarnizione (set) Tubazione	Set afdichting LT/ST	Conjunto de juntas LT/ST
5A	**Element of construction**	**Groupe de construction**	**Gruppo di construzione**	**Montagegroep**	**Grupo de construccion**
1	Gasket D24x30.5x2mm AFM34 (10pc)	JOINT D24x30,5x2 AFM34 (10x)	Guarnizione D24x30,5x2 AFM34 (10x)	Afdichting D24x30,5x2 AFM34 (10x)	Junta D24x30,5x2 AFM34 (10x)
2	Extension G1"x 80mm	TUBUL RALLONGE G1"x 80mm	Prolunga G1"x80mm	Verlenging G1"x80mm	Prolongacion G1"x80mm
3	Non-return valve G1"-1 1/2"	TUBUL CLAPET ANTI RETOUR G1" - 1 1/2"	Valvola di non ritorno G1"-1 1/2"	Terugslagklep G1"-1 1/2"	Valvula antiretorno G1" - 1 1/2"
4	Gasket D28x44x2mm, black (5 pc in kit)	Joint D28x44x2mm, noir (5x)	Guarnizione D28x44x2mm, nero (5x)	Pakking D28x44x2mm , zwart (5x)	Junta D28x44x2mm, negro (5x)
5	Pump WILO RS25/6-3 180mm 9h Universal	Pompe WILO RS25/6-3 180mm 9h Universal	Pompa WILO RS25/6-3 180mm 9h Universal	Pomp WILO RS25/6-3 180mm 9h Universal	Bomba WILO RS25/6-3 180mm 9h Universal
6	Reducing piece G 1 1/2"-1"	Reduction G1 1/2"-1	Riduzione G 1 1/2"-1"	Verloopnippel G 1 1/2"-1"	Pieza de Reducción G 1 1/2"-1" LT135-200
7	Metal corrugated hose DN25 800mm	Tubul coude DN25 L800	Tubo metallico ondulato DN25 800mm	Metalen flexibel DN25 800mm	Manguera ondulada de metal DN25 800mm
8	Angle G1"	Tubul coude G1	Angolo G1"	Hoeksteun G1"	Angulo G1" compl. LT135-200/1
9	Double nipple G1" 65mm	MAMELON G1" 65MM COMPL.	Nipplo doppio G1"xG1" 65mm	Nippel G1"xG1" 65mm	Casquillo doble G1" 65 mm compl. LT135-
10	O-Ring Set 35x3 Set (5 Pice)	Joint torique 35x3 kit de (5 pièces)	Set O-ring 35x3 set (5 pz.)	O-Ring set 35x3 set (5 st)	Juego juntas tóricas 35x3 juego 5 piezas
11	Double nipple G1" 65mm	MAMELON G1" 65MM COMPL.	Nipplo doppio G1"xG1" 65mm	Nippel G1"xG1" 65mm	Casquillo doble G1" 65 mm compl. LT135-
12	Metal corrugated hose DN 25 950mm lg	Tuyau metal flexible DN25 L950mm	Tubo flessibile DN25 950mm	Slang DN25 950mm	Manguera DN25 950mm
13	Gasket set boiler storage pipework LT/ST	JOINTS G 115 LT/ST	Guarnizione (set) Tubazione	Set afdichting LT/ST	Conjunto de juntas LT/ST
5B	**Element of construction**	**Groupe de construction**	**Gruppo di construzione**	**Montagegroep**	**Grupo de construccion**
1	Gasket D24x30.5x2mm AFM34 (10pc)	JOINT D24x30,5x2 AFM34 (10x)	Guarnizione D24x30,5x2 AFM34 (10x)	Afdichting D24x30,5x2 AFM34 (10x)	Junta D24x30,5x2 AFM34 (10x)
2	Extension G1"x 80mm	TUBUL RALLONGE G1"x 80mm	Prolunga G1"x80mm	Verlenging G1"x80mm	Prolongacion G1"x80mm
3	Non-return valve G1"-1 1/2"	TUBUL CLAPET ANTI RETOUR G1" - 1 1/2"	Valvola di non ritorno G1"-1 1/2"	Terugslagklep G1"-1 1/2"	Valvula antiretorno G1" - 1 1/2"
4	Gasket D28x44x2mm, black (5 pc in kit)	Joint D28x44x2mm, noir (5x)	Guarnizione D28x44x2mm, nero (5x)	Pakking D28x44x2mm , zwart (5x)	Junta D28x44x2mm, negro (5x)
5	Pump WILO RS25/6-3 180mm 9h Universal	Pompe WILO RS25/6-3 180mm 9h Universal	Pompa WILO RS25/6-3 180mm 9h Universal	Pomp WILO RS25/6-3 180mm 9h Universal	Bomba WILO RS25/6-3 180mm 9h Universal
6	Reducing piece G 1 1/2"-1"	Reduction G1 1/2"-1	Riduzione G 1 1/2"-1"	Verloopnippel G 1 1/2"-1"	Pieza de Reducción G 1 1/2"-1" LT135-200
7	Metal corrugated hose DN 25 950mm lg	Tuyau metal flexible DN25 L950mm	Tubo flessibile DN25 950mm	Slang DN25 950mm	Manguera DN25 950mm
8	Angle G1"	Tubul coude G1	Angolo G1"	Hoeksteun G1"	Angulo G1" compl. LT135-200/1
9	Metal corrugated hose DN25 585mm	Tubul flexible DN25 L585	Tubo metallico ondulato DN25 585mm	Metalen flexibel DN25 585mm	Manguera ondulada de metal DN25 585mm
10	Gasket set boiler storage pipework	JOINTS S 105 LT/ST	Set guarnizioni Bollitore Gruppo tubazio	Set afdichting Boiler Leidinggroep	Set De Juntas S115

Gerätetypen Types of appliances	Types de chaudieres Tipo apparecchi	Toesteltypes Tipos de aplicaciones	
Gerät Appliance Chaudiere Apparecchio Toestel Aparato	Bestell-Nr. Ordering no. Numero de commande n° d'ordine Bestelnummer Número el ordenar	Land Country Pay Paese Land Paese	Bemerkungen Remarks Remarques Osservazioni Opmerkingen Observaciones
ST151 - 951	99905448	Deutschland	

Bosch Thermotechnik GmbH
Sophienstraße 30-32
D-35576 Wetzlar
www.buderus.de

Buderus